Gould Inc.
Recording Systems Division

MP MASTER
MA34606

GOULD
Electronics

Operating and Service Manual

GOULD 2X00W MULTI-CHANNEL
RECORDING SYSTEM

GOULD
Electronics

GOULD
Electronics

MANUAL PART NO.
220X-80XXXX-XX

GOULD 2X00W MULTI-CHANNEL RECORDING SYSTEM

The information contained herein is the exclusive property of Gould Inc., except as otherwise indicated and shall not be reproduced in whole or in part without explicit written authorization from the company. The distribution of this material outside the company may occur only as authorized by the company in writing.

All information contained in this manual is the latest product information available at the time of printing. The right is reserved to make changes at any time without notice.

PRINTED 7-83
COPYRIGHT 1983

Gould Inc., Recording Systems Division
3631 Perkins Avenue, Cleveland, Ohio 44114

1ST PRINTING
PRINTED IN U.S.A.

WARNING

2X00W SERIES WAVEFORM RECORDING SYSTEMS IN FLIP-TOP PORTABLE CASES:

THE AMPLIFIER ASSEMBLY IS MOUNTED IN THE HINGED TOP. THE WEIGHT OF THE TOP WITH THE AMPLIFIER IN IS BALANCED BY A STRONG SPRING TO MAKE RAISING AND LOWERING EASIER AND SAFER. CAUTION MUST BE USED WHEN THE AMPLIFIER ASSEMBLY IS REMOVED, BECAUSE WHEN THE EMPTY TOP IS RELEASED, IT CAN OPEN SUDDENLY WITH A STRONG FORCE. THERE IS A POSSIBILITY OF INJURY TO PERSONNEL AND/OR DAMAGE TO EQUIPMENT UNLESS THE FOLLOWING PROCEDURE IS OBSERVED:

If the amplifier must be removed from the case, make certain the four shoulder screws (two each side) that hold the top to the lower case are kept securely in place while the amplifier is being removed. Remove the amplifier assembly. Then, while someone firmly holds down the top, carefully remove the two FRONT shoulder screws and slowly let the top open.

CAUTION: DO NOT REMOVE THE REAR SHOULDER SCREWS, BECAUSE THE TOP IS HINGED ON THESE SCREWS.

WARRANTY

CURRENT EQUIPMENT:

The Gould Recording Systems Division's products as shown in the Current Equipment Catalog are warranted for a period of one year from date of shipment to original purchaser. They are warranted to conform to the applicable published specifications in effect at the time of shipment, and to be free from any defects in material or manufacture when used with recommended Gould associated equipment and Gould chart paper. LIABILITY OF THE GOULD RECORDING SYSTEMS DIVISION UNDER SUCH WARRANTY IS LIMITED TO SERVICING OR REPLACING DEFECTIVE PARTS EXCEPT PENS, STYLI, FUSES AND BATTERIES AND DOES NOT INCLUDE CALIBRATION AND MINOR MAINTENANCE AS OUTLINED IN GOULD OPERATING MANUALS. (Exceptions: The thermal pen in the 110 Strip Chart Recorder is guaranteed for life. The magnetic head assemblies in the Tape Recorder are warranted for 1000 hours of use or (1) one year from date of first shipment whichever occurs first.) IN NO EVENT SHALL THE GOULD RECORDING SYSTEMS DIVISION BE LIABLE UNDER ANY CIRCUMSTANCES, FOR ANY LOSS OF PROFITS OR OTHER CONTINGENT, CONSEQUENTIAL OR SPECIAL DAMAGES. Units are to be returned transportation prepaid by the buyer. The Gould Recording Systems Division will have the right of final determination of the cause and existence of a defect under this warranty. This warranty shall not apply to any products which have been subjected to misuse, improper installation, repair, alteration, neglect, accident, inundation, fire or operation outside their published maximum ratings. THE FOREGOING WARRANTY IS EXCLUSIVE AND EXPRESSLY IN LIEU OF ALL OTHER WARRANTIES WHETHER EXPRESSED OR IMPLIED, INCLUDING ANY IMPLIED WARRANTIES OF MERCHANTABILITY OR FITNESS AND OF ANY OTHER OBLIGATION AND SHALL CONSTITUTE THE SOLE REMEDY OF THE BUYER AND SOLE LIABILITY OF THE SELLER.

Gould offers an Extended Warranty Contract for all Recording Systems Division's products manufactured in the Cleveland Perkins' facility, along with calibration traceable to NBS. Please contact the Service Center listed below for details before your warranty expires.

REPLACEMENT PARTS: Same as above -- except ninety (90) days from date of shipment.

If a defect occurs:

1. Notify your nearest RSD Service Center (see below), giving full details of the difficulty, and include the model number, type number, and serial number. On receipt of this information, service data or shipping authorization and instructions will be forwarded to you.

2. On receipt of the shipping authorization, forward the instrument prepaid to location indicated on shipping authorization.

Compliance with the above procedure will assure the earliest repair and return of your equipment.

REFER TO REAR COVER FOR SERVICE CENTER LOCATIONS.

Gould instruments are individually tested and calibrated before shipment to assure dependability and verify their accuracy. To this procedure must be added an unseen ingredient of prime importance to you: The Gould concept of continuing service. Gould responsibility for each instrument sold covers far more than its delivery. Of equal concern is the equipment's suitability for its intended purpose, its correct installation, instruction of operating personnel -- plus future servicing and maintenance. The Gould Field Service Department offers customers any or all of these services:

Field Service

- o Installation
- o Field maintenance
- o NBS Certification

Training

- o Instruction of operators
- o On-site training seminars
- o Formal Training courses

Service Contracts

- o Fixed Fee
- o Time and Material
- o Extended Warranty

Our Seal of Pride Gould Inc., Recording Systems Division, and its predecessor organizations tracing back to Charles F. Brush, have been preeminent in instrumentation development since the 1920's. Among Gould's many achievements is a series of the world's best performing, most versatile, and reliable direct writing recording systems.

Today, Gould recorders and signal conditioners are the overwhelming choice for recording analog signals in the most critical industrial, scientific, and biophysical measurement applications. Whether recording the faintest life signals of a patient in a hospital operating room or the most critical variables in the lab or on the production line, you can depend on the accuracy, faithfulness, clarity, and permanence of the traces made by a Gould recorder.

Innovative design, coupled with highest quality, are hallmarks of all Gould products.

The Field Service Engineer Gould field service engineers provide on-the-spot assistance whenever and wherever it is required. While every field service engineer is the product of intensive and thorough factory training, you will find that his greatest strength evolves from field experience and his knowledge of your objectives. He is aware of your problems, is willing and able to assist you in their solution, and is backed by the nation's most experienced organization in recording instrumentation.

Our field service engineers and technicians are daily engaged in the installation, testing, maintenance, repair and inspection of Gould recording systems all over the country. They can provide you with any information about our instruments you may require; if not, they will find the answer to your problem.

Overhaul and Repair Because we service only our own products, our customers can feel confident of prompt, effective results when they turn to Gould Factory Service Centers.

The repair service these centers provide is of particular appeal to those companies that do not operate an instruments repair facility of their own. By designating the nearest Gould Service Center as its maintenance depot, a Gould-equipped company is assured the best chance for continuity of recording instrumentation.

Many companies with their own repair facilities find it more convenient and more truly economical to have their Gould equipment repaired by service contract with the closest Service Center. In addition to enjoying fast turn-around, these companies are spared the expense of carrying an inventory of recorder parts, accessories, and supplies.

Calibration and Certification A small, quiet room in the Standards and Calibration Section at the Gould plant in Cleveland contains precision reference standards just one step removed from the prime reference measurement standards of the United States – at the National Bureau of Standards in Washington. Included in this room which is temperature-controlled within one degree and has a constant relative humidity of 40%, are standards for voltage, frequency (derived from the atomic vibration of caesium), resistance, capacitance -- in fact all basic parameters of electrical measurement. The room is maintained under stabilized conditions 365 days a year.

The calibration practice of all Gould Service Centers is directly traceable to the National Bureau of Standards. We can supply complete calibration for any Gould equipment, and we can also certify to manufacturer's specifications followed by a letter of certification when required.

Training The Gould field service engineer will hold short training courses either on the job or at his facility. On-the-job training is usually a brief, informal session with the people who will actually be operating the Gould equipment.

Formal classroom training is more complete: detailed information, a thorough review of underlying theory, training devices, demonstration of problem solving and examination of students to determine their understanding and proficiency is accomplished at our Cleveland plant.

Contracts Customer companies requiring temporary or permanent service are afforded contract arrangements by which agreed-upon maintenance, repair, upgrading and calibration services are performed on a routine basis. Service contracts are now in effect with a number of customers, affording substantial savings in time and money.

Owing to the various requirements of each customer, we do not reproduce here a standard, boilerplate agreement -- which might contain too much or too little. Instead, we tailor each contract to a particular customer's needs. This practice has singlehandedly produced substantial savings in time and money for others; and it can do the same for you.

An extended warranty is available at the point of sale allowing a regulated budget for the first two years of ownership. You may take advantage of this warranty within the first year of ownership at a percentage of the current listed price.

SERVICE CENTERS

ATLANTA
RECORDING SYSTEMS DIVISION
1710 Wilwat Drive
Suite D
Norcross, Georgia 30093
Phone (404) 441-5556

BOSTON
RECORDING SYSTEMS DIVISION
129 Middlesex Turnpike
Burlington, Massachusetts 01803
Phone: (617) 272-0750

BAY AREA (CA)
RECORDING SYSTEMS DIVISION
25936 Eden Landing Road
Hayward, CA 94545
Phone: (415) 887-1300

CHICAGO
RECORDING SYSTEMS DIVISION
1550 East Higgins Road
Suite 122
Elk Grove Village, Illinois 60007
Phone: (312) 640-4380

CLEVELAND
RECORDING SYSTEMS DIVISION
3631 Perkins Avenue
Cleveland, Ohio 44114
Phone: (216) 361-3315

DAYTON
RECORDING SYSTEMS DIVISION
4668 Gateway Circle
Kettering, Ohio 45440
Phone: (513) 433-9586

DENVER
RECORDING SYSTEMS DIVISION
1500 West Hampden Avenue
Unit 1C
Englewood, Colorado 80110
Phone: (303) 781-4473

DETROIT
RECORDING SYSTEMS DIVISION
32307 Mally Road
Madison Hts., Michigan 48071
Phone: (313) 588-4024

HOUSTON
RECORDING SYSTEMS DIVISION
10500 Northwest Freeway
Houston, Texas 77092
Phone: (713) 680-1121

LANHAM, MD
RECORDING SYSTEMS DIVISION
6301 Ivy Lane Suite 106
Greenbelt, Maryland 20770
Phone: (301) 345-0050

LOS ANGELES
RECORDING SYSTEMS DIVISION
16310 Arthur Street
Cerritos, California 90701
Phone: (213) 404-1919

ORLANDO
RECORDING SYSTEMS DIVISION
772 Northlake Avenue
Altamonte Springs, Florida 32701
Phone (305) 830-0695

PHILADELPHIA
RECORDING SYSTEMS DIVISION
1 Great Valley Parkway East Suite 6
Great Valley Corporate Center
Malvern, Pennsylvania 19355
Phone: (215) 647-2214

PITTSBURGH
RECORDING SYSTEMS DIVISION
Campbells Run Road
Parkway West
Pittsburgh, Pennsylvania 15205
Phone: (412) 923-2160

SADDLEBROOK
RECORDING SYSTEMS DIVISION
74 Kenney Place
Saddle Brook, New Jersey 07662
Phone: (201) 845-0220

SEATTLE
RECORDING SYSTEMS DIVISION
The Commons Bldg. Suite C-155
1200 112th Avenue NE
Bellevue, Washington 98004
Phone: (206) 453-8100

TORONTO
ALLAN CRAWFORD ASSOC., LTD
6503 Northam Drive
Mississauga, Ontario, Canada
Phone: 678-1500

EUROPE

GOULD INSTRUMENTS S.A.F.
57 rue St. Sauveur 91160
Ballainvilliers, France
Phone: 011-33-6-934-1067

GOULD BRYAN INSTRUMENTS LTD.
Willow Lane
Mitcham, Surrey CR4-4UL, England
Phone: 01-640-3490

GOULD INSTRUMENTS GMBH
Dieselstrasse 5-7
D-6453 Seligenstadt,
West Germany
Phone: 06182-3107

The following information is intended to alert the user to possible dangers and important information contained in this manual. The "WARNINGS" and "CAUTIONS" do not eliminate the dangers that they signal. Close attention to the information supplied plus "common sense" operation are the major accident prevention measures.

WARNING:	**Failure to follow this warning may result in bodily injury.**

CAUTION:	**Failure to follow this caution may result in possible damage to the product or equipment.**

TABLE OF CONTENTS

SECTION	TITLE	PAGE
I	GENERAL INFORMATION	
1.1	INTRODUCTION	1.1
1.2	MULTI-CHANNEL DIGITIZER/AMPLIFIER	1.1
1.3	2800S OSCILLOGRAPHIC RECORDER	1.1
1.4	SPECIFICATIONS	1.3
II	INSTALLATION	
2.1	GENERAL	2.1
2.2	SERVICE UPON RECEIPT	2.1
2.3	LINE VOLTAGE REQUIREMENTS	2.1
2.4	ANALOG SIGNAL CONNECTIONS	2.1
2.4.1	896452 Analog Harness Connections	2.1
2.4.2	Digital Control Harness Assembly 896451	2.1
2.4.3	Remote Speed Control Assembly 896642	2.1
III	PARTS IDENTIFICATION	
3.1	GENERAL	3.1
3.2	ATTACHING PARTS	3.1

LIST OF ILLUSTRATIONS

FIGURE	TITLE	PAGE
1-1	2X00W MULTI-CHANNEL RECORDING SYSTEM	1.2
1-2	OUTLINE DIMENSIONS	1.4
2-1	REAR PANEL SIGNALS AND CONTROLS	2.2
2-2	REMOTE SPEED CONTROL ASSEMBLY	2.3
3-1	AMPLIFIER ASSEMBLY, 8 CHANNEL	3.3
3-2	CASE ASSEMBLY 893928	3.6

SECTION I

GENERAL INFORMATION

1.1 INTRODUCTION

The new 2000W Series from Gould merges digital storage technology with a superb direct writing oscillograph to deliver a compact, versatile, high frequency analog recording system. With DC to 50 KHz response, equivalent chart speeds to 13,000 ips and 10 μs transient response, the 2000W outperforms all other recorders. It's faster, uses low-cost paper, provides the best trace quality, and is easy to use. (Refer to Figure 1-1).

Even more important, the 2000W performs many functions other recorders can't. Functions like triggering, to capture and record random and one-shot transients even while unattended; and record pre-trigger information to show cause as well as effect; digital output of stored waveform data for subsequent analysis; plus you can even replot or retransmit the same stored data repeatedly.

In short, the Gould 2000W is the only stand-alone instrument that gives you the data processing power of digital storage plus accurate, clean hard copy of analog signals.

1.2 MULTI-CHANNEL DIGITIZER/AMPLIFIER

Unique multi-channel capabilities with our 4, 6 channel or 8 channel versions, plus the versatility you need with features like:

- Wide measurement range from 50 mV to 500V full scale.
- Choose real time or storage operation channel by channel.
- Record by exception with versatile triggering capability, and see pre-trigger data, too.
- Eliminates time skew between channels with common time base and simultaneous sampling.
- Record the entire event with our large 8K per channel memory.
- Computer analyze waveforms using our RS232C output.

1.3 2800S OSCILLOGRAPHIC RECORDER

Finest hard copy available with our performance-proven direct writing oscillograph. Capture high frequency waveforms with clear, crisp permanent traces on low cost paper, with features like:

- Your choice of eight 40mm or six 50mm channels. This manual covers both 2800W and 2600W. For 6 channel systems, change references in this manual from 2800S to 2600S and from 13-4186-00 to 13-4166-00.
- Wide chart speed range from 0.05 mm/s to 200 mm/s. Equivalent chart speeds from 0.125 mm/s to 333,000 mm/s in store mode.
- High frequency response from DC to 160 Hz real time, or DC to 50 KHz in store mode.
- Correlate events with time using our alpha-numeric annotation/real time clock option.
- Choice of pressurized ink or thermal writing systems, backed by 39 years of Gould recording know-how.
- Greater convenience with your choice of roll or fan-fold paper.

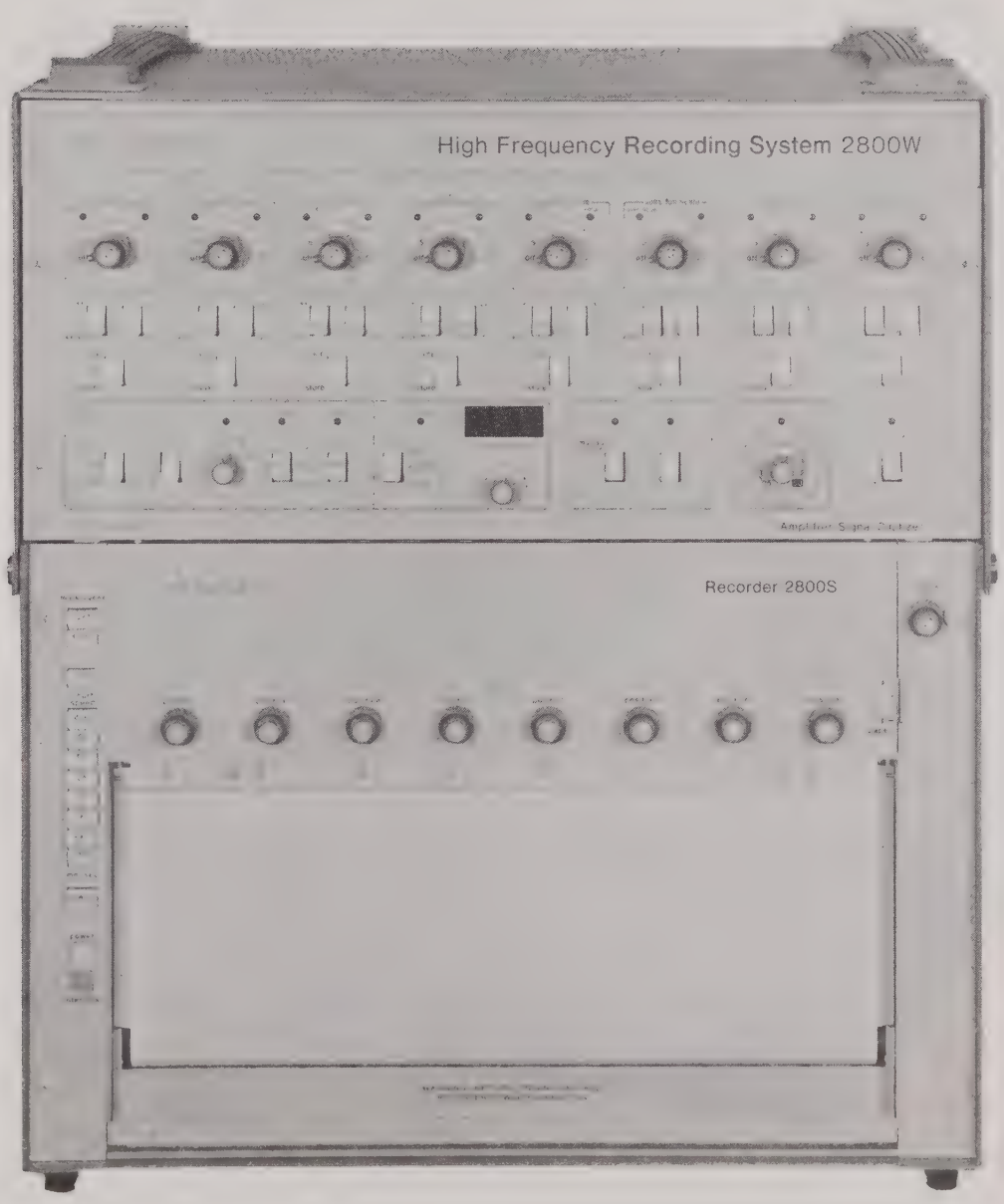

bi 2484

FIGURE 1-1 2X00W MULTI-CHANNEL RECORDING SYSTEM

FIGURE 1-2 2600W WAVEFORM SYSTEM

1.4 SPECIFICATIONS

General

Number of Analog Channels and Channel Spans: 2800W: Eight 40-mm channels. 2600W: Six 50-mm channels.

Event Marker Channels: 2800W: Two standard, six optional. 2600W: Two standard, five optional.

Writing System

Writing Method: Pressurized fluid or thermal.
Trace Width: 0.01 in. (0.25 mm) nominal, fluid marking.
Fluid Capacity: Two 1-oz. disposable cartridges, sufficient for one year of typical use.
Signal Limiters: Adjustable electronic and mechanical.
Pen Position Control: Continuously adjustable ± 100% of full scale.

Memory

4096 words/channel standard, 8192 words/channel with option. Memory size selectable into 2, 4, or 8k words per channel.

Time Base

Sample Rate: 500 Hz to 333 kHz in 1-2-5 sequence.

Synchronization: All channels sampled simultaneously.

Clock Accuracy: ± 0.01%.

Analog Input Channels

Input Voltage Range: ± 50 mV to ± 500 V in 1-2-5 sequence, continuously variable >2.5 to 1.

Amplifier Bandwidth (– 3.0 dB): dc to 50 kHz (dc coupling); 2 Hz to 50 kHz (ac coupling).

Input Impedance: 1 MΩ shunted by ⩽55 pF.

Input Coupling: ac or dc.

CMRR (1 kΩ imbalance): ⩾90 dB at dc, ⩾75 dB at 60 Hz.

Max. CMV: 500 Vdc or peak ac.

Max. Input Voltage: 500 Vdc or peak ac on 10 V to 500 V ranges; 300 V dc or rms on all other ranges.

Cross Talk: Channel to channel ⩽ – 80 dB.

Performance, Amplifier Mode

Signal Digitizer is by-passed and channel functions as a wide band amplifier.

Gain Accuracy (15 °C to 35 °C): 1.0% of full scale, including non-linearity.

Linearity: 0.5% of full scale.

Zero Accuracy (15 °C to 35 °C): 1.0% of full scale.

Gain Stability: 0.08% of full scale per °C.

Zero Stability: 0.07% of full scale per °C.

Noise (dc to 100 Hz): ⩽40 mV peak-to-peak, referred to output.

DC Performance Store Mode

A to D Resolution: 8 bits.

Gain Accuracy (15 °C to 35 °C): 2.5% of full scale (including non-linearity and digitizing errors).

Zero Accuracy (15 °C to 35 °C): 2.2% of full scale.

Gain Stability: 0.1% of full scale per °C.

Zero Stability: 0.15% of full scale per °C.

Noise: ⩽15 mV peak-to-peak (referred to output).

Recording Time

2 s/1k of memory to 3 ms/1k of memory, selectable in 1-2-5 sequence.

Chart Drive System

Chart Speeds: 5, 10, 25, 50, 100, 200 mm/s and divide by 100; continuously variable >2.5 to 1.

Effective Chart Speeds: From 0.125 mm/s to 333,000 mm/s, depending on time base and chart speed settings.

Accuracy: ± 0.25% at 15 °C to 35 °C (50 °F to 95 °F).

Chart Wander: ± 0.25 mm.

Chart Length: Reproducible: 400 ft. (120 m); fan fold: 500 11.8-in. (30 cm) sheets; all others: 275 ft. (84 m).

Chart Speed Control: Front panel push buttons, remotely via TTL or contact closure, or external TTL pulse drive.

Synch Pulse: 30-μs TTL pulse output to synchronize recorders.

Analog Output Characteristics

Output Impedance: <5Ω, capable of driving ⩾2 kΩ shunted by ⩽5000 pF.

Output Level: ± 5 V for full-scale output.

Reconstruction Filter (store mode): Low pass 4-pole filter optimized for sine wave flatness and minimum overshoot.

Trigger Characteristics

Internal:

Type: True level; above, below or window.
Control: 0 to ± 100% of range, continuously selectable.
Coupling: ac or dc, switch selectable.
Stability: 0.04% of range per °C.

External:

Type: True level; above, below or window.
Control: 0 to ± 50 V, continuously selectable.
Input Impedance: 50 kΩ.
Coupling: ac or dc, switch selectable.
Maximum Input: ± 50 Vdc or peak ac.

Recording/Arm Modes:

Man: Switch arms unit for a single recording.
Auto: Switch arms unit for continuous retriggered recording.
Off: Holds off trigger, for instrument set-up.

Trigger Position: 5 selectable positions; – 100%, – 75%, – 50%, – 25%, and 0% of memory.

Environmental, Mechanical

Operating Temperature: 0 ° to 43 °C.

Storage Temperature: – 40 ° to + 70 °C.

Humidity: 95% RH at 32 °C non-condensing.

Weight: Net, 67 kg (150 lbs).

Dimensions: Height, 571 mm (22.5 in.); width, 500 mm (19.7 in.); depth, 397 mm (15.6 in.).

Power Requirements: 115 V/230 V ± 10%; 47 to 63 Hz.

Max. Power Dissipation: 800 VA for 2800W; 675 VA for 2600W.

Specifications are subject to change without notice.

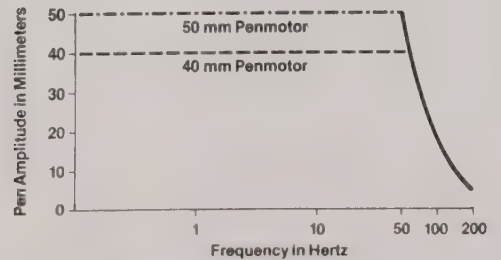

Writing System Response (Real Time/Amplifier Mode)

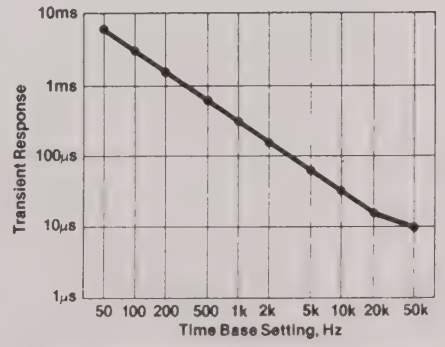

Time Base Setting vs. Transient Response (Store Mode)

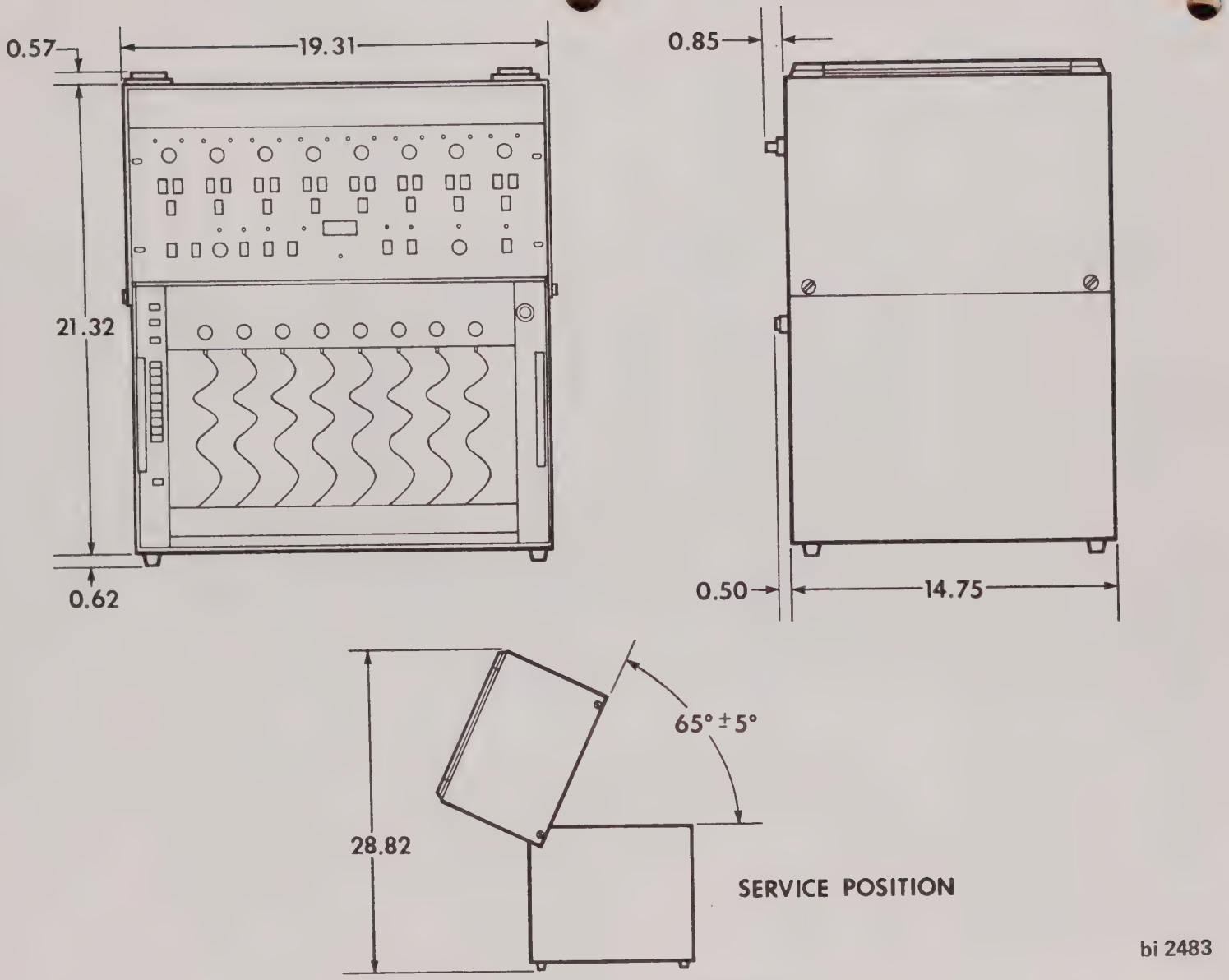

FIGURE 1-3 OUTLINE DIMENSIONS

SECTION II

INSTALLATION

2.1 GENERAL

This section contains information necessary to put the 2000W system into service, including installation of optional equipment.

2.2 SERVICE UPON RECEIPT

CAUTION: POWER MUST BE OFF DURING THE FOLLOWING SEQUENCE.

Before making signal connections and applying power to the recorder, the following service must be performed:

1. Remove sheet of chart paper from under pens and load roll of chart paper as described in Section V of the 2800S Oscillograph Manual.
2. Slide all manual ink valves with tubing attached to ON position. (Follow direction of arrows on manifold bar.) Valves are located on top of recorder. Lift the jaws configuration up to gain access to valves. Slide cover forward and lift out. (If recorder is rack mounted, slide recorder out of rack.)
3. Ink cartridge and ink solenoid valve are turned on prior to shipment from factory.

NOTE: Ink cartridge should be near full.

4. Place Jaws Top back in position (or slide recorder back into rack and secure).

2.3 LINE VOLTAGE REQUIREMENTS

The last digit of the model number designates line voltage. Frequency range for all models is 50-400Hz. Listed below is last digit of model number and required line voltage. For Multi-Channel Waveform insure that two position slide switch is in proper line voltage position.

DIGIT	LINE VOLTAGE
0	115 Vac
1	100 Vac
6	230 Vac
7	200 Vac

CAUTION: MAKE SURE A.C. JUMPER BOARD IS IN CORRECT POSITION (PARA. 2.9 OF 2800S OSCILLOGRAPH MANUAL).

2.4 ANALOG SIGNAL CONNECTIONS

Signal input connections can be made directly to pen drive amplifiers. Two phone jacks are provided on each drive amplifier. They are located on the rear of the recorder (Figure 2-1). Use shielded cable (Belden 8422 or equal) with mating phone plugs provided. Tips are high; rings are low; barrels are common.

2.4.1 896452 Analog Harness Connections

This Harness Assembly is supplied with the 2000W System, and is connected from J6 and J7 of the Waveform to J103 and J104 of the 2800S Oscillograph. Refer to Section 2.3.1 of the Multi-Channel Waveform manual for specific pin out connections for analog output channels.

2.4.2 Digital Control Harness Assembly 896451 (Optional)

This assembly allows automatic chart drive control of 50 mm/sec upon receiving a trigger from the Multi-Channel Waveform Recorder. It is connected from J4 of the Waveform Recorder to J102 of the 2800S Oscillograph Recorder. Refer to Section 2.3.1 of the Waveform Recorder manual for pin connections of J4. This assembly also has two wires which connect to the left or right TTL Event Markers of the 2800S Recorder for trigger mark indication.

2.4.3 Remote Speed Control Assembly (896642) (Optional) (Refer to Figure 2-2)

This speed control assembly is connected from J4 of the Waveform Recorder to J102 of the 2000S Oscillograph and allows automatic remote chart speeds of 5, 10, 25, 50, 100, and 200 mm/sec. This assembly also has two wires which connect to the left or right (TTL) Event Markers of the 2000S Recorder for trigger mark indication.

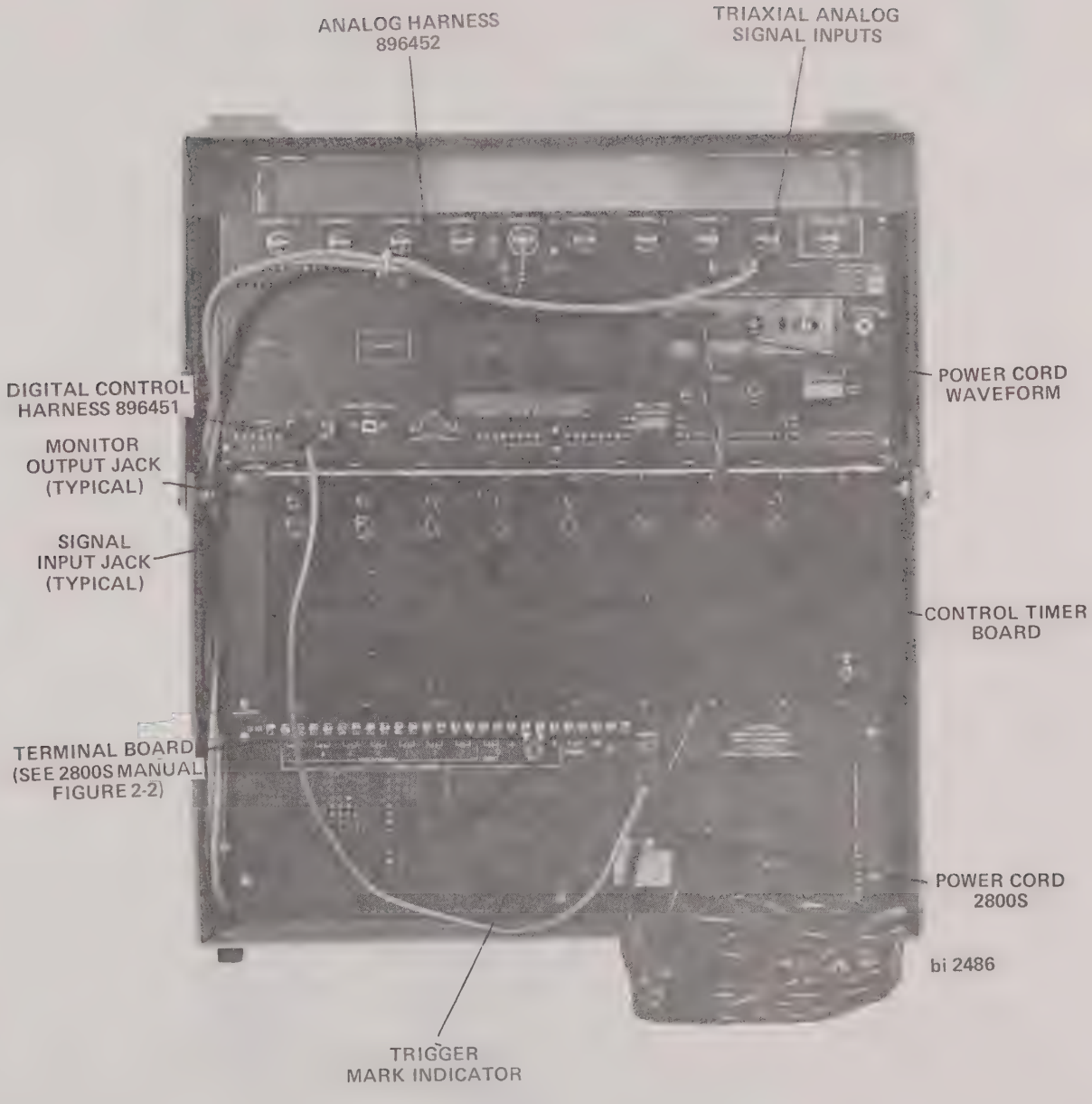

FIGURE 2-1 REAR PANEL SIGNALS AND CONTROLS

bi 2487

FIGURE 2-2 REMOTE SPEED CONTROL ASSEMBLY

SECTION III

PARTS IDENTIFICATION

3.1 GENERAL

This instrument has been accurately calibrated and adjusted before shipment from the factory, and should give long troublefree service. For servicing beyond the scope of the instructions contained in this manual or the technical equipment available, contact your nearest Gould Service Engineer listed on the warranty card shipped with the recorder.

The following parts lists and schematic diagrams are designed to assist in servicing and repairing the recorder. For replacement parts, refer to the appropriate Figure and Parts List that follow.

To assure prompt and satisfactory delivery of replacement parts, include the following information with your purchase order:

1. Name and model number of the instrument.
2. Description of part as listed in this manual.
3. Gould part number.

NOTE: Do not use the SYMBOL NUMBER from the parts list for identifying desired parts on the order.

3.2 ATTACHING PARTS

(A-P) indicates that the following parts, up to -- -- -- -- -- * -- -- -- -- --, are Attaching Parts; i.e., unillustrated hardware required to attach the preceding item to the assembly.

EXPLODED VIEW PARTS LIST
AMPLIFIER ASSEMBLY, 8 CHANNEL
FIGURE 3-1

ITEM NUMBER	PART NUMBER	DESCRIPTION 1 2 3 4 5 6	USED ON
	220X-8807-0X	Recorder System	
1	13-4186-00	Amplifier Assembly, 8 Channel Waveform	
2	291067	Power Cord	
3	896587	Panel Assembly, System S.S. (A-P)	
	31-119918-0205	Screw	
	1-216741-430	Lockwasher	
		-- -- -- -- -- * -- -- -- -- --	
4	893928-2	Case Assembly (See Figure 3-2)	
5	294027	Bracket, Zee (A-P)	
	31-119918-0208	Screw	
	1-216741-430	Lockwasher	
	1-118195-309	Washer	
		-- -- -- -- -- * -- -- -- -- --	
6	896452	Harness, Analog	
	284427-9	Connector	
	284428-9	Shield, Connector	
	289119	Screw, Retainer	
	0-270155-1	Connector	
	284432-2	Contact	
	270153-1	Contact	
	249850	Cable	
	240819-3	Lug, Solder	
	232997-23	Strap, Retaining	
7	896451	Digital Cable Assembly	
8	124804-3	Clamp, Cable (A-P)	
	31-119918-4008	Screw	
	1-118195-305	Washer	
		-- -- -- -- -- * -- -- -- -- --	
9	2108-8893-XX	Recorder Assembly, Thermal	
	2107-8893-XX	Recorder Assembly, Ink (A-P)	
	31-119918-0212	Screw	
	1-216741-430	Lockwasher	
	1-118195-309	Washer	
	248352-0218	Screw	
	128967-1	Washer, Nylon	
		-- -- -- -- -- * -- -- -- -- --	

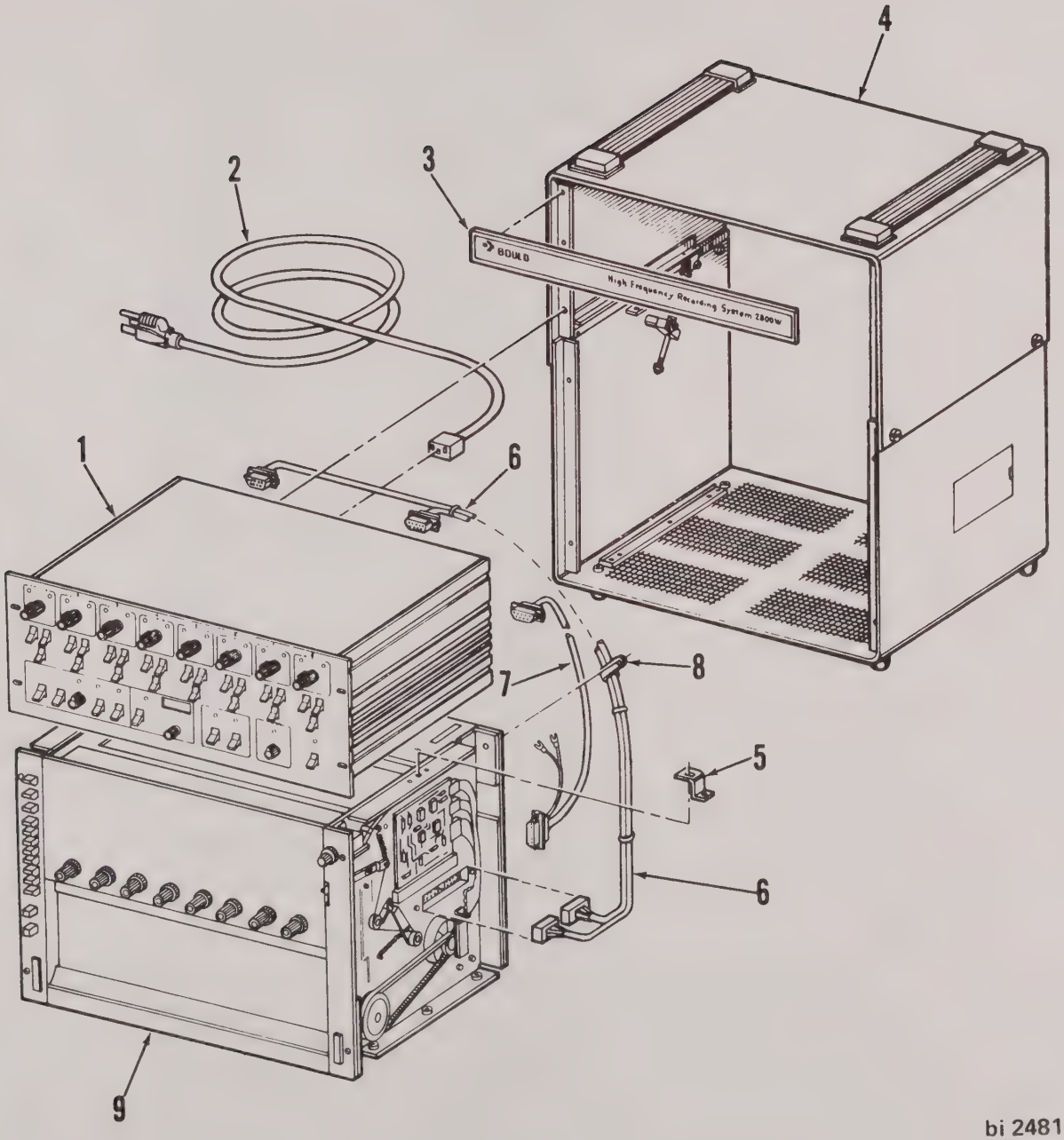

FIGURE 3-1 AMPLIFIER ASSEMBLY, 8 CHANNEL

EXPLODED VIEW PARTS LIST
CASE ASSEMBLY 893928
FIGURE 3-2

ITEM NUMBER	PART NUMBER	DESCRIPTION 1 2 3 4 5 6	USED ON
	893928	Case Assembly	
1	896414	Case Assembly, Upper	
		Case, Upper	
	293784	Rail, Mounting	
	293783	Support	
2	689851	Support, Handle	
		(A-P)	
	31-119918-6207	Screw, Pan Head	
	1-216741-420	Lockwasher	
	31-119918-0207	Screw, Pan Head	
		-- -- -- -- -- * -- -- -- -- --	
3	693940	Strap, Modified	
4	685518-4	Handle	
5	286097-2	Leaf	
	893655	Case Assembly, Lower	
	293822	Support, Hinge	
	293800	Stop, Door	
	293656	Rail, Mounting	
	234369-31	Spacer, Clinch	
	3-129275-107	Nut, Clinch	
6	393791	Spacer, L.H.	
7	393792	Spacer, R.H.	
		(A-P for items 6 & 7)	
	31-119918-4002	Screw,	
	294028	Support	
		-- -- -- -- -- * -- -- -- -- --	
8	493654	Case, Lower	
9	293925	Screw, Shoulder	
		(A-P)	
	242461-45	Nut, Self-Locking	
	263475	Washer	
		-- -- -- -- -- * -- -- -- -- --	
10	293788	Screw, Shoulder	
		(A-P)	
	263475	Washer	
		-- -- -- -- -- * -- -- -- -- --	
11	293652	Door	
		(A-P)	
	13-262716-6204	Screw, Self- Tapping	
		-- -- -- -- -- * -- -- -- -- --	
12	693827	Hinge, Modified	
		(A-P)	
	31-119918-6202	Screw, Pan Head	
		-- -- -- -- -- * -- -- -- -- --	
13	293789	Anchor, Rod	
		(A-P)	
	270148-6	Screw, Shoulder	
	31-119918-6205	Screw, Pan Head	
		-- -- -- -- -- * -- -- -- -- --	
14	293790-3	Rod, Support	
15		Washer	

EXPLODED VIEW PARTS LIST
CASE ASSEMBLY 893928
FIGURE 3-2 (continued)

ITEM NUMBER	PART NUMBER	DESCRIPTION 1 2 3 4 5 6	USED ON
16	296669	Spring	
17		Arm, Rod	
		(A-P)	
		Screw Number 6	
		Washer Number 6	
		-- -- -- -- -- * -- -- -- -- -- --	
18	240704-04	Nut, Self-Locking	
19		Bushing	
20	287185	Bar, Support	
		(A-P)	
	13-262716-8206	Screw, Self-Tapping	
		-- -- -- -- -- * -- -- -- -- -- --	
21	267451-2	Bail	
		(A-P)	
	13-262716-6206	Screw, Self-Tapping	
		-- -- -- -- -- * -- -- -- -- -- --	

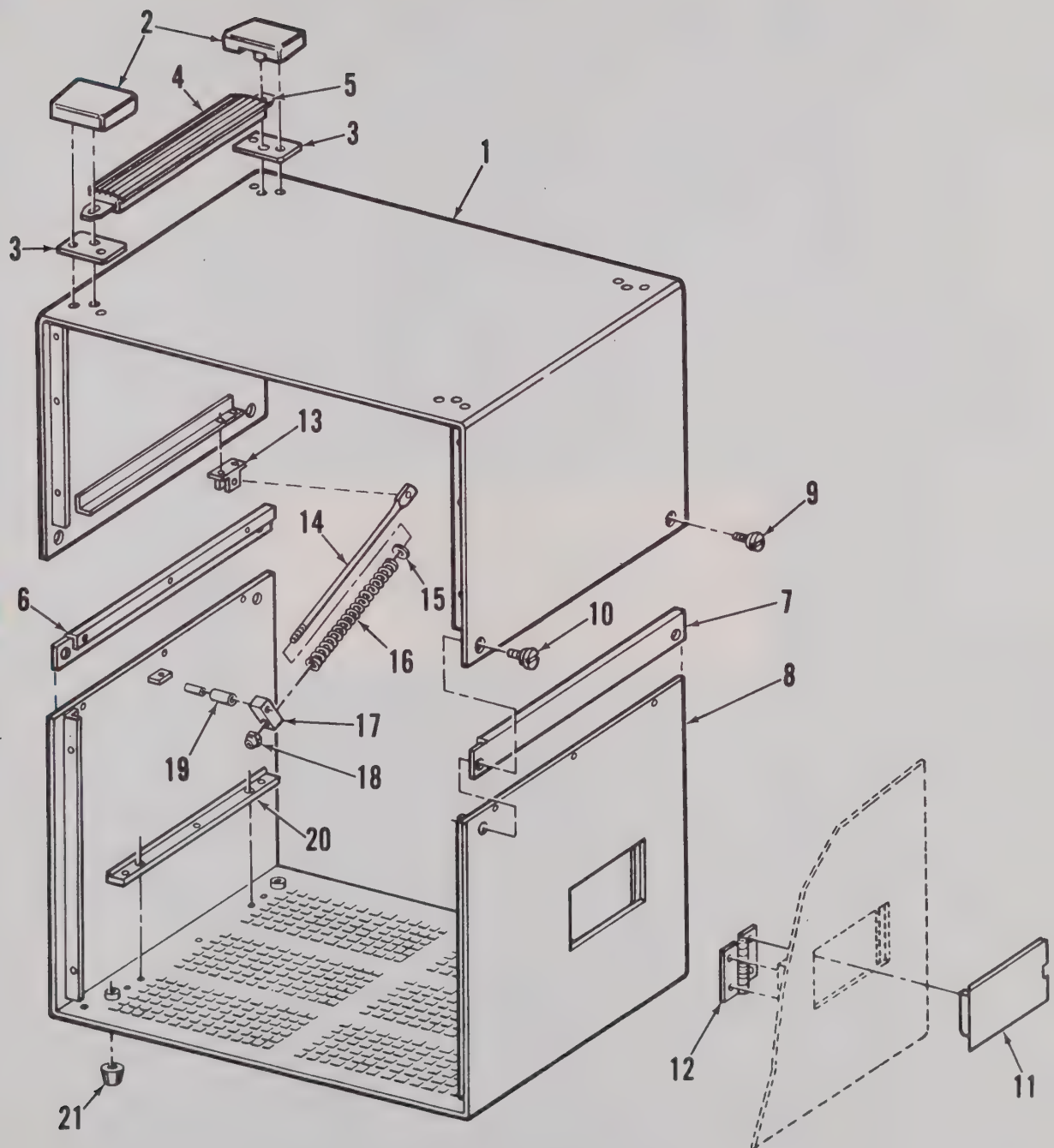

FIGURE 3-2 CASE ASSEMBLY 893928

Operating and Service Manual

GOULD MULTI-CHANNEL
AMPLIFIER/SIGNAL DIGITIZER
WAVEFORM RECORDER
(4, 6 and 8 CHANNEL VERSIONS)
MODEL 13-4XX6-00

GOULD
Electronics

GOULD
Electronics

MANUAL PART NO.
13-804XX6-00

GOULD MULTI-CHANNEL AMPLIFIER/SIGNAL DIGITIZER WAVEFORM RECORDER (4, 6 and 8 CHANNEL VERSIONS) MODEL 13-4XX6-00

The information contained herein is the exclusive property of Gould Inc., except as otherwise indicated and shall not be reproduced in whole or in part without explicit written authorization from the company. The distribution of this material outside the company may occur only as authorized by the company in writing.

All information contained in this manual is the latest product information available at the time of printing. The right is reserved to make changes at any time without notice.

PRINTED 7-83
COPYRIGHT 1983

Gould Inc., Recording Systems Division
3631 Perkins Avenue, Cleveland, Ohio 44114

1ST PRINTING
PRINTED IN U.S.A.

GOULD MODEL 13-4XX6-00
MULTI-CHANNEL WAVEFORM RECORDER
MANUAL REVISIONS
MANUAL NO. 13-804XX6-00, 1ST PRINTING

In keeping with the theme of constant improvement, The Gould Technical Support Department maintains current manuals by periodically supplying the latest revisions. Please insert the following changes in ink, on the designated pages. Place this sheet just behind the cover page of the manual.

PAGE	DESCRIPTION
1.6	Add to list of accessories at bottom of page: "Memory Expansion Board (4K) (896353). . .11-4313-02".
2.3A, 2.3B	Insert these two new pages (attached) just behind page 2.3.

November 17, 1983

CAUTION

The following instructions concern signal connections to the Gould Multi-Channel Waveform Recorder. Equipment damage can occur if these instructions are not carefully followed.

MULTI-CHANNEL WAVEFORM SIGNAL CONNECTIONS

The waveform recorder's amplifiers are all single-ended input amplifiers sharing a single common. These amplifiers can be configured to operate either Single-Ended Grounded or Single-Ended Floating. To operate single-ended floating, simply remove the chassis to common BNC connector on the rear panel.

The single-ended grounded configuration should be used with Single-Ended Floating or Balanced Floating signal sources but never with any form of DRIVEN OFF GROUND signal source.

CAUTION: IF A DRIVEN OFF GROUND SOURCE IS USED WITH THE WAVEFORM RECORDER GROUNDED, DAMAGE TO THE WAVEFORM RECORDER AND SIGNAL SOURCE MAY OCCUR. ANY FORM OF DRIVEN OFF GROUND SOURCE MUST BE MEASURED WITH THE WAVEFORM RECORDER IN THE FLOATING MODE OF OPERATION AND THE OUTER SHIELD OF THE TRIAXIAL INPUT CABLE MUST NOT BE CONNECTED TO THE SIGNAL SOURCE.

Balanced Grounded signal sources MUST be measured in the FLOATING mode also. Keep in mind that capacitances from the two input leads to earth ground are not the same on a single-ended input amplifier. This can affect the accuracy of the measurement at high frequencies when using balanced grounded signal source.

Single-Ended Ground signal sources may be monitored provided one of the grounds is disconnected. When possible the ground at the signal source should be disconnected. If this is not possible, the waveform recorder must operate in the floating mode (see Figure 2-1A) and the outer shield of the triaxial input cable must not be connected. If these conditions are not satisfied, the conditions for a ground loop exist (see Figure 2-1B). Any difference in ground potentials will cause a current to flow as shown in Figure 2-1B forming a ground loop.

In some situations even the precautions taken in Figure 2-1A may not be adequate. In the triaxial input cable there are two shields (see Figures 2-1C and 2-1D). The outer shield is connected to the waveform chassis and the inner shield is connected to channel common. A small amount of capacitance exists between these two shields. Current can now flow along the signal common lead, be capacitively coupled to the outer shield and return to earth through the waveform recorder chassis. This could cause a small voltage to develop along the inner shield (amplifier common) which would add to or subtract from the input signal. This effect would only be seen if the ground loop voltage is high frequency (typically greater than 30 KHz).

The GOULD waveform recorder uses a modified single-ended input amplifier configuration. A 1.8 ohm resistor has been added between the amplifier common and the system common (see Figure 2-1E). The purpose of this resistor is to reduce the effects of magnetic or electrostatic

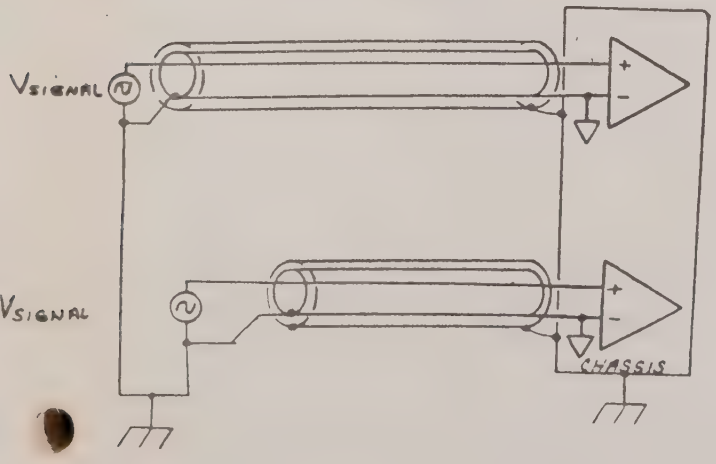

FIGURE 2-1A SINGLE-ENDED GROUNDED SOURCE

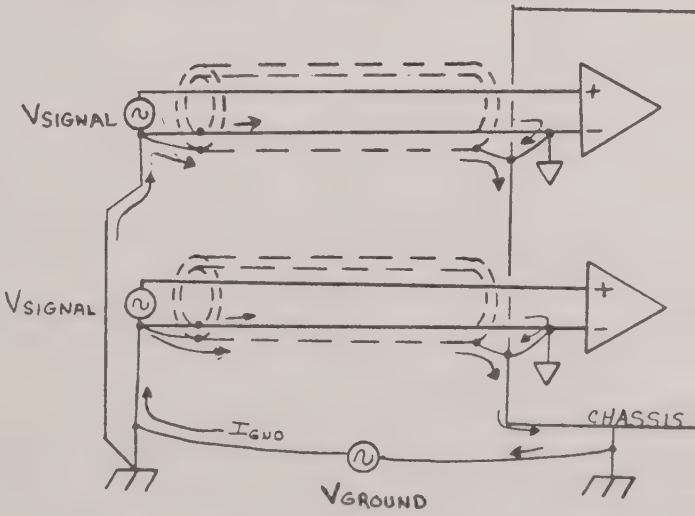

FIGURE 2-1B GROUND LOOP FORMED BY GROUNDED SOURCE AND GROUNDED AMPLIFIER

noise pickup in the signal leads. It does this by forming a voltage divider with the distributed resistances in the input leads and connections. Since this resistor is much larger than the distributed resistances on the input leads and connections, most of the noise voltage is developed across this resistor. Little noise voltage develops across the amplifier's input as a result of the noise currents flowing in the amplifier's common lead.

This special input configuration warrants some extra care when making signal connections. The most important consideration to remember is to connect ALL the signal common leads. DO NOT use one common ground for all channels. This can result in measurement errors when using the most sensitive voltage ranges. The reason for this is that the voltage developed across the 1.8 ohm resistor is now in series with the signal voltage and will either add to or subtract from the signal. The outer shield of the triaxial cable should be connected to the signal low whenever possible.

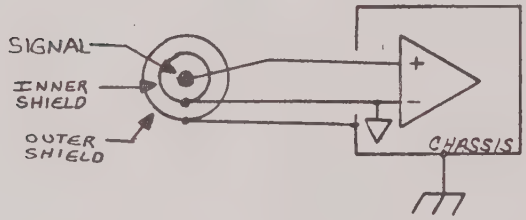

FIGURE 2-1C TRIAXIAL CABLE

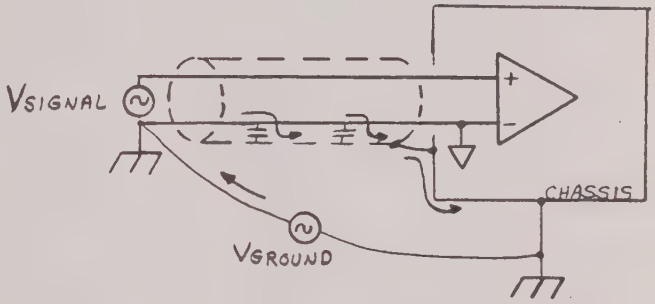

FIGURE 2-1D GROUND LEAKAGE IN THE FLOATING MODE

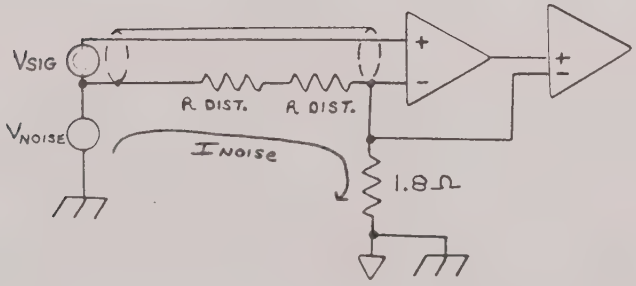

FIGURE 2-1E NOISE REDUCTION RESISTOR

WARRANTY

CURRENT EQUIPMENT:

The Gould Recording Systems Division's products as shown in the Current Equipment Catalog are warranted for a period of one year from date of shipment to original purchaser. They are warranted to conform to the applicable published specifications in effect at the time of shipment, and to be free from any defects in material or manufacture when used with recommended Gould associated equipment and Gould chart paper. LIABILITY OF THE GOULD RECORDING SYSTEMS DIVISION UNDER SUCH WARRANTY IS LIMITED TO SERVICING OR REPLACING DEFECTIVE PARTS EXCEPT PENS, STYLI, FUSES AND BATTERIES AND DOES NOT INCLUDE CALIBRATION AND MINOR MAINTENANCE AS OUTLINED IN GOULD OPERATING MANUALS. (Exceptions: The thermal pen in the 110 Strip Chart Recorder is guaranteed for life. The magnetic head assemblies in the Tape Recorder are warranted for 1000 hours of use or (1) one year from date of first shipment whichever occurs first.) IN NO EVENT SHALL THE GOULD RECORDING SYSTEMS DIVISION BE LIABLE UNDER ANY CIRCUMSTANCES, FOR ANY LOSS OF PROFITS OR OTHER CONTINGENT, CONSEQUENTIAL OR SPECIAL DAMAGES. Units are to be returned transportation prepaid by the buyer. The Gould Recording Systems Division will have the right of final determination of the cause and existence of a defect under this warranty. This warranty shall not apply to any products which have been subjected to misuse, improper installation, repair, alteration, neglect, accident, inundation, fire or operation outside their published maximum ratings. THE FOREGOING WARRANTY IS EXCLUSIVE AND EXPRESSLY IN LIEU OF ALL OTHER WARRANTIES WHETHER EXPRESSED OR IMPLIED, INCLUDING ANY IMPLIED WARRANTIES OF MERCHANTABILITY OR FITNESS AND OF ANY OTHER OBLIGATION AND SHALL CONSTITUTE THE SOLE REMEDY OF THE BUYER AND SOLE LIABILITY OF THE SELLER.

Gould offers an Extended Warranty Contract for all Recording Systems Division's products manufactured in the Cleveland Perkins' facility, along with calibration traceable to NBS. Please contact the Service Center listed below for details before your warranty expires.

REPLACEMENT PARTS: Same as above -- except ninety (90) days from date of shipment.

If a defect occurs:

1. Notify your nearest RSD Service Center (see below), giving full details of the difficulty, and include the model number, type number, and serial number. On receipt of this information, service data or shipping authorization and instructions will be forwarded to you.

2. On receipt of the shipping authorization, forward the instrument prepaid to location indicated on shipping authorization.

Compliance with the above procedure will assure the earliest repair and return of your equipment.

REFER TO REAR COVER FOR SERVICE CENTER LOCATIONS.

Gould instruments are individually tested and calibrated before shipment to assure dependability and verify their accuracy. To this procedure must be added an unseen ingredient of prime importance to you: The Gould concept of continuing service. Gould responsibility for each instrument sold covers far more than its delivery. Of equal concern is the equipment's suitability for its intended purpose, its correct installation, instruction of operating personnel -- plus future servicing and maintenance. The Gould Field Service Department offers customers any or all of these services:

Field Service

- o Installation
- o Field maintenance
- o NBS Certification

Training

- o Instruction of operators
- o On-site training seminars
- o Formal Training courses

Service Contracts

- o Fixed Fee
- o Time and Material
- o Extended Warranty

Our Seal of Pride Gould Inc., Recording Systems Division, and its predecessor organizations tracing back to Charles F. Brush, have been preeminent in instrumentation development since the 1920's. Among Gould's many achievements is a series of the world's best performing, most versatile, and reliable direct writing recording systems.

Today, Gould recorders and signal conditioners are the overwhelming choice for recording analog signals in the most critical industrial, scientific, and biophysical measurement applications. Whether recording the faintest life signals of a patient in a hospital operating room or the most critical variables in the lab or on the production line, you can depend on the accuracy, faithfulness, clarity, and permanence of the traces made by a Gould recorder.

Innovative design, coupled with highest quality, are hallmarks of all Gould products.

The Field Service Engineer Gould field service engineers provide on-the-spot assistance whenever and wherever it is required. While every field service engineer is the product of intensive and thorough factory training, you will find that his greatest strength evolves from field experience and his knowledge of your objectives. He is aware of your problems, is willing and able to assist you in their solution, and is backed by the nation's most experienced organization in recording instrumentation.

Our field service engineers and technicians are daily engaged in the installation, testing, maintenance, repair and inspection of Gould recording systems all over the country. They can provide you with any information about our instruments you may require; if not, they will find the answer to your problem.

Overhaul and Repair Because we service only our own products, our customers can feel confident of prompt, effective results when they turn to Gould Factory Service Centers.

The repair service these centers provide is of particular appeal to those companies that do not operate an instruments repair facility of their own. By designating the nearest Gould Service Center as its maintenance depot, a Gould-equipped company is assured the best chance for continuity of recording instrumentation.

Many companies with their own repair facilities find it more convenient and more truly economical to have their Gould equipment repaired by service contract with the closest Service Center. In addition to enjoying fast turn-around, these companies are spared the expense of carrying an inventory of recorder parts, accessories, and supplies.

Calibration and Certification A small, quiet room in the Standards and Calibration Section at the Gould plant in Cleveland contains precision reference standards just one step removed from the prime reference measurement standards of the United States – at the National Bureau of Standards in Washington. Included in this room which is temperature-controlled within one degree and has a constant relative humidity of 40%, are standards for voltage, frequency (derived from the atomic vibration of caesium), resistance, capacitance -- in fact all basic parameters of electrical measurement. The room is maintained under stabilized conditions 365 days a year.

The calibration practice of all Gould Service Centers is directly traceable to the National Bureau of Standards. We can supply complete calibration for any Gould equipment, and we can also certify to manufacturer's specifications followed by a letter of certification when required.

Training The Gould field service engineer will hold short training courses either on the job or at his facility. On-the-job training is usually a brief, informal session with the people who will actually be operating the Gould equipment.

Formal classroom training is more complete: detailed information, a thorough review of underlying theory, training devices, demonstration of problem solving and examination of students to determine their understanding and proficiency is accomplished at our Cleveland plant.

Contracts Customer companies requiring temporary or permanent service are afforded contract arrangements by which agreed-upon maintenance, repair, upgrading and calibration services are performed on a routine basis. Service contracts are now in effect with a number of customers, affording substantial savings in time and money.

Owing to the various requirements of each customer, we do not reproduce here a standard, boilerplate agreement -- which might contain too much or too little. Instead, we tailor each contract to a particular customer's needs. This practice has singlehandedly produced substantial savings in time and money for others; and it can do the same for you.

An extended warranty is available at the point of sale allowing a regulated budget for the first two years of ownership. You may take advantage of this warranty within the first year of ownership at a percentage of the current listed price.

SERVICE CENTERS

ATLANTA
RECORDING SYSTEMS DIVISION
1710 Wilwat Drive
Suite D
Norcross, Georgia 30093
Phone (404) 441-5556

BOSTON
RECORDING SYSTEMS DIVISION
129 Middlesex Turnpike
Burlington, Massachusetts 01803
Phone: (617) 272-0750

BAY AREA (CA)
RECORDING SYSTEMS DIVISION
25936 Eden Landing Road
Hayward, CA 94545
Phone: (415) 887-1300

CHICAGO
RECORDING SYSTEMS DIVISION
1550 East Higgins Road
Suite 122
Elk Grove Village, Illinois 60007
Phone: (312) 640-4380

CLEVELAND
RECORDING SYSTEMS DIVISION
3631 Perkins Avenue
Cleveland, Ohio 44114
Phone: (216) 361-3315

DAYTON
RECORDING SYSTEMS DIVISION
4668 Gateway Circle
Kettering, Ohio 45440
Phone: (513) 433-9586

DENVER
RECORDING SYSTEMS DIVISION
1500 West Hampden Avenue
Unit 1C
Englewood, Colorado 80110
Phone: (303) 781-4473

DETROIT
RECORDING SYSTEMS DIVISION
32307 Mally Road
Madison Hts., Michigan 48071
Phone: (313) 588-4024

HOUSTON
RECORDING SYSTEMS DIVISION
10500 Northwest Freeway
Houston, Texas 77092
Phone: (713) 680-1121

LANHAM, MD
RECORDING SYSTEMS DIVISION
6301 Ivy Lane Suite 106
Greenbelt, Maryland 20770
Phone: (301) 345-0050

LOS ANGELES
RECORDING SYSTEMS DIVISION
16310 Arthur Street
Cerritos, California 90701
Phone: (213) 404-1919

ORLANDO
RECORDING SYSTEMS DIVISION
772 Northlake Avenue
Altamonte Springs, Florida 32701
Phone (305) 830-0695

PHILADELPHIA
RECORDING SYSTEMS DIVISION
1 Great Valley Parkway East Suite 6
Great Valley Corporate Center
Malvern, Pennsylvania 19355
Phone: (215) 647-2214

PITTSBURGH
RECORDING SYSTEMS DIVISION
Campbells Run Road
Parkway West
Pittsburgh, Pennsylvania 15205
Phone: (412) 923-2160

SADDLEBROOK
RECORDING SYSTEMS DIVISION
74 Kenney Place
Saddle Brook, New Jersey 07662
Phone: (201) 845-0220

SEATTLE
RECORDING SYSTEMS DIVISION
The Commons Bldg. Suite C-155
1200 112th Avenue NE
Bellevue, Washington 98004
Phone: (206) 453-8100

TORONTO
ALLAN CRAWFORD ASSOC., LTD
6503 Northam Drive
Mississauga, Ontario, Canada
Phone: 678-1500

EUROPE

GOULD INSTRUMENTS S.A.F.
57 rue St. Sauveur 91160
Ballainvilliers, France
Phone: 011-33-6-934-1067

GOULD BRYAN INSTRUMENTS LTD.
Willow Lane
Mitcham, Surrey CR4-4UL, England
Phone: 01-640-3490

GOULD INSTRUMENTS GMBH
Dieselstrasse 5-7
D-6453 Seligenstadt,
West Germany
Phone: 06182-3107

TABLE OF CONTENTS

SECTION	TITLE	PAGE
I	GENERAL INFORMATION	
1.1	INTRODUCTION	1.1
1.2	SPECIFICATIONS	1.3
1.3	ACCESSORIES	1.6
II	INSTALLATION	
2.1	GENERAL	2.1
2.2	INITIAL INSPECTION	2.1
2.3	SIGNAL CONNECTIONS	2.1
2.3.1	Rear Panel Controls & Connectors	2.1
2.3.2	Internal Controls	2.3
2.3.3	Digital Output	2.7
III	OPERATION	
3.1	GENERAL	3.1
3.2	FRONT PANEL CONTROLS	3.1
3.3	SIGNAL GLOSSARY	3.5
3.4	EXTERNAL SIGNALS	3.8
3.5	FUNCTIONAL CHECKOUT PROCEDURE	3.8
3.5.1	General	3.8
3.5.2	Equipment Required	3.8
3.5.3	Set Front Panel Controls	3.8
3.5.4	Trigger Section	3.8
3.5.5	ABOVE/BELOW/WINDOW Operation	3.13
3.5.6	Use of % PRETRIGGER	3.13
3.5.7	AC Coupling for Trigger Source Operation	3.15
3.5.8	Error Lights Operation	3.15
3.5.9	External Analog Trigger Operation	3.15
3.5.10	Pretrigger Memory Fill	3.16
3.5.11	Trigger Level Accuracy	3.16
3.5.12	Timebase Operation	3.17
IV	THEORY OF OPERATION	
4.1	INTRODUCTION	4.1
4.2	GENERAL	4.1
4.3	ANALOG BOARD	4.3
4.3.1	Main Amplifier	4.3
4.3.2	Sample/Hold Circuit	4.3
4.3.3	Overvoltage Detection	4.3
4.3.4	Reconstruction Filter	4.3
4.3.5	Output Stage	4.4
4.3.6	Analog Range Encoding	4.4
4.3.7	External Analog Triggering	4.4
4.4	INTERCONNECT BOARD	4.4
4.4.1	Timebase Selector	4.4
4.4.2	Interface Channel Select	4.4
4.5	FRONT PANEL BOARD	4.4
4.5.1	Trigger Circuit	4.5
4.5.2	Arm Switch	4.5
4.5.3	Pretrigger Switch	4.5

TABLE OF CONTENTS (Continued)

SECTION		TITLE	PAGE
IV		THEORY OF OPERATION (Continued)	
	4.5.4	Timebase Switch	4.5
	4.5.5	Trigger LED	4.5
	4.5.6	Trigger Level Indicator	4.5
	4.6	DIGITAL BOARD	4.5
	4.6.1	Arming Circuit	4.5
	4.6.2	Sequencer Operation	4.7
	4.6.3	Memory Write Circuitry	4.7
	4.6.4	Data Storing Sequence	4.7
	4.6.5	Real Time Monitoring	4.10
	4.6.6	Plotting Mode	4.10
	4.6.7	Chart Acceleration	4.11
	4.6.8	Data Plotting	4.11
	4.6.9	Trigger Marker	4.11
	4.7	INTERFACE OPERATIONS - TRANSMIT	4.11
	4.7.1	Plot-Transmit	4.13
	4.7.2	Re-plot/Re-transmit	4.13
	4.8	ANALOG/DIGITAL CONVERTER	4.13
	4.8.1	Digital to Analog Converter	4.14
	4.9	POWER SUPPLIES	4.14
	4.9.1	+5 Volt Supply	4.14
	4.9.2	+5 Volt Current Limiting	4.14
	4.9.3	+5 Volt Supply Overvoltage Protection	4.14
	4.9.4	-12 Volt Supply	4.14
	4.9.5	+12 Volt Supply	4.14
V		MAINTENANCE	
	5.1	INTRODUCTION	5.1
	5.2	SUBASSEMBLY REPLACEMENT	5.1
	5.2.1	Analog Board Removal	5.1
	5.2.2	Digital Board Removal	5.1
	5.2.3	RS232C Removal	5.1
	5.2.4	Power Supply Removal	5.1
	5.2.5	Sandwich Assembly Removal	5.1
	5.3	CALIBRATION	5.1
	5.3.1	Mechanical/Visual Check	5.3
	5.3.2	Calibration Procedure	5.3
	5.4	TROUBLESHOOTING	5.4
	5.4.1	General	5.4
	5.4.2	Troubleshooting Table	5.4
	5.4.3	Troubleshooting Flow Chart	5.4
VI		PARTS IDENTIFICATION	
	6.1	GENERAL	6.1
	6.2	PARTS USED ON OTHER MODELS	6.1
		APPENDIX	
		SCHEMATIC DRAWINGS	

TABLE OF CONTENTS (Continued)

LIST OF ILLUSTRATIONS

FIGURE	TITLE	PAGE
1-1	MODEL 13-4186-00 STAND ALONE	1.1
2-1	REAR PANEL CONTROLS AND CONNECTORS	2.2
2-2	DIGITAL BOARD INTERNAL CONTROLS	2.4
2-3	FRONT PANEL BOARD	2.5
2-4	ANALOG BOARD	2.6
2-5	OUTLINE DIMENSIONS	2.8
3-1	FRONT PANEL CONTROLS	3.2
3-2	INTERFACE TIMING DIAGRAM	3.6
3-3	TRIGGER EXAMPLES	3.14
3-4	TIMEBASE SELECTOR	3.17
3-5	TIMEBASE SETTING, HZ	3.18
4-1	SIMPLIFIED BLOCK DIAGRAM	4.2
4-2	ARM AND STORE CYCLE	4.6
4-3	A/D CONVERSION AND DATA STORAGE CYCLE	4.8
4-4	TIME RELATIONSHIPS OF TRIGGER DELAYS	4.9
4-5	TRANSMIT AND PLOT CYCLE	4.12
5-1	MULTICHANNEL REAR PANEL REMOVAL	5.2
5-2	TOP COVER ANALOG BOARD REMOVAL	5.5
5-3	VOLTS FULL SCALE KNOB REMOVAL ANALOG BOARD	5.6
5-4	ANALOG BOARD REMOVAL	5.7
5-5	TOP COVER REMOVAL DIGITAL BOARD	5.8
5-6	DIGITAL BOARD REMOVAL	5.9
5-7	RS232C REMOVAL	5.10
5-8	POWER SUPPLY REMOVAL P6, P1	5.11
5-9	POWER SUPPLY REMOVAL PHILLIPS SCREWS	5.12
5-10	POWER SUPPLY REMOVAL PHILLIPS SCREWS	5.13
5-11	PHILLIPS SCREWS SANDWICH ASSEMBLY	5.14
5-12	FRONT PANEL SANDWICH ASSEMBLY	5.15
6-1	MULTICHANNEL RECORDER, MODEL 13-4XX6-00	6.3
6-2	MULTICHANNEL AMPLIFIER ASSEMBLY, MODEL 13-4XX6-00	
6-3	MULTICHANNEL CHASSIS ASSEMBLY, MODEL 13-4XX6-00	6.8
6-4	MULTICHANNEL RECORDER POWER SUPPLY, MODEL 13-4XX6-00	6.10
6-5	MULTICHANNEL RECORDER BRACKET ASSEMBLY REAR	6.12
6-6	CASE ASSEMBLY, 895669-1	6.14
6-7	BOARD ASSEMBLY, DIGITAL - 896236 (8 Channel)	6.23
6-8	BOARD ASSEMBLY, DIGITAL - 896236-1 (6 Channel)	6.31
6-9	BOARD ASSEMBLY, DIGITAL - 896236-2 (4 Channel)	6.38
6-10	BOARD ASSEMBLY, FRONT PANEL - 896233 (8 Channel)	6.45
6-11	BOARD ASSEMBLY, FRONT PANEL - 896233-1 (6 Channel)	6.52
6-12	BOARD ASSEMBLY, FRONT PANEL - 896233-2 (4 Channel)	6.58
6-13	BOARD ASSEMBLY, ANALOG - 896235 (8 Channel)	6.73
6-14	BOARD ASSEMBLY, ANALOG - 896235-1 (6 Channel)	6.86
6-15	BOARD ASSEMBLY, ANALOG - 896235-2 (4 Channel)	6.95
6-16	BOARD ASSEMBLY, INTER-CONNECT - 896234	6.97

TABLE OF CONTENTS (Continued)

LIST OF TABLES

TABLE	TITLE	PAGE
2-1	PIN NUMBER/SIGNAL NAME	2.7
3-1	FRONT PANEL CONTROLS	3.1
3-2	CHANNEL/LINES	3.5
3-3	VFS/LINES	3.6
3-4	MEMORY SIZE	3.6
3-5	TIMEBASE RANGE	3.6
3-6	MODES & TRIGGERING	3.9
3-7	RANGE % PRETRIGGER	3.15
3-8	TRIGGER AC/DC	3.16
3-9	TRIGGER LEVEL ACCURACY	3.16
3-10	RECORDING TIME (SEC.) vs. MEMORY SIZE	3.18
4-1	VOLTS FULL SCALE ENCODING	4.4
4-2	MEMORY COUNTER VS. MEMORY SIZE	4.10
5-1	ELECTRICAL POWER MALFUNCTIONS	5.4A
	MULTI-CHANNEL TROUBLESHOOTING FLOWCHART	5.4B

SECTION I

GENERAL INFORMATION

1.1 INTRODUCTION

The Gould Model 13-4XX6-00 Multi-Channel Amplifier/Signal Digitizer Waveform Recorder extends a standard pen recorder bandwidth to 50 KHz on a low duty cycle basis and provides the unique ability to be able to record pretrigger signal information. This instrument has a high impedance single-ended analog input, an easy no calculation setup, automatic chart recorder start-stop or speed change features, and a trigger point indicator. It operates on the well-known recording principle of sampling an analog signal, converting a sample to a 8 bit digital number, and then storing sampled data into a memory. The memory size is switch selectable to 2048, 4096 or 8192 bytes. Stored samples are then removed from memory at a fixed rate, applied to a digital-to-analog converter for analog signal reconstruction, where the analog signal is then made available for high resolution pen plotting. (Refer to Figure 1-1). This high frequency recorder is also available in 4, 6 and 8 channel versions. Figures 1-2 thru 1-4 illustrate the various versions and model numbers.

The user can select from a wide range of signal sensitivities, chart time axis scale factors, signal level trigger, and percent of pretrigger recording; and a fixed analog playback rate in conjunction with a selected 50mm/sec. chart speed. A 2x magnification is accomplished by selecting the 100mm/sec chart speed. A standard input signal minimum sample resolution, memory data output rate, chart sample resolution, and chart speed provide the user with a no calculation predetermined time axis scale factors. Time axis scale factors are indicated on the waveform recorder time base selector switch.

A front panel selector switch allows the user to disable waveform recording and use the input sensitivity selector as a d.c. amplifier type signal conditioner.

a. Major Product Features

1. High Impedance Single-Ended Analog Input (1 Megohm shunted by a maximum of 55 pF. (10X - isolation probes may be used).

2. Wide Measurement Range - .05 to 500V full scale in 13 selectable ranges, + OFF.

3. Operates Off-Ground - up to 500VDC.

4. Operates as a high frequency DC amplifier - flat to 50 KHz ±1dB @ 50 KHz.

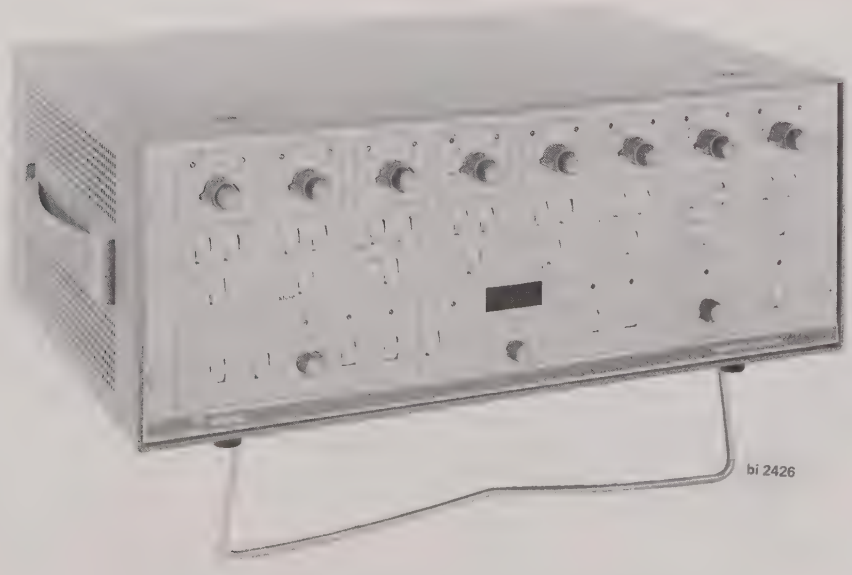

FIGURE 1-1 MODEL 13-4386-00 STAND ALONE

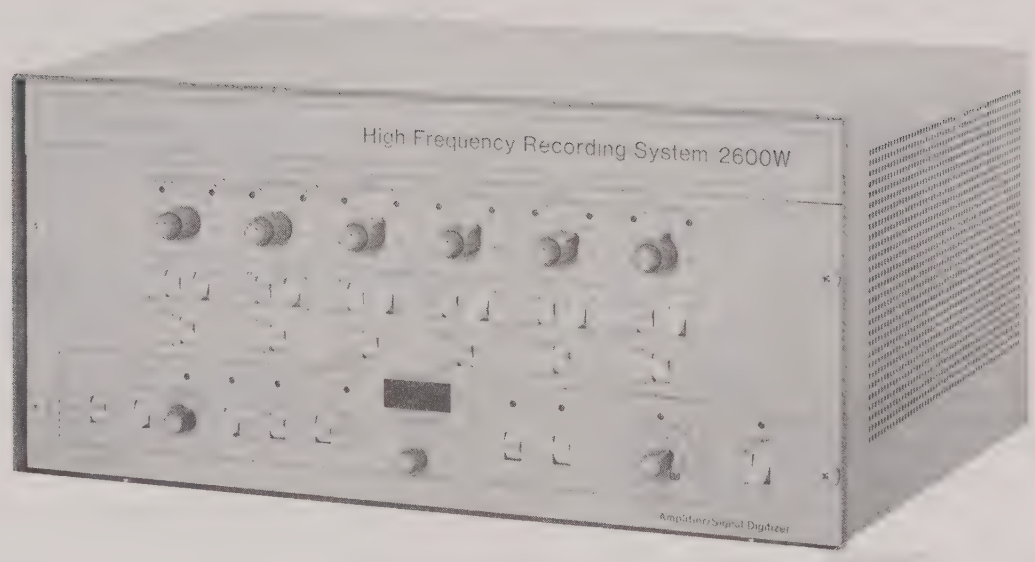

FIGURE 1-2 MODEL 13-4366-00 STAND ALONE

FIGURE 1-3 MODEL 13-4346-00 STAND ALONE

5. Large Storage Capacity - 4K of memory allows for record times of 12 msec to 8 sec. depending on time base selected.

6. Exceptional Waveform Reconstruction - A 8 bit A/D converter and a fourth order low pass output filter provides for reconstruction of sine-waves with no perceivable distortion or signal attenuation.

7. Ten Selectable Timebase Settings - Provide selectable bandwidths from .05 KHz to 50 KHz.

8. Time Base Switch is also labeled by Time/ Point, simplifying operation and need for user calculations.

9. Exceptional triggering accuracy and versatility is also provided.

    - o Calibrated level triggering provides for accurate setting of trigger (typically <2%); over a range of ±100% of full scale (dependent on input voltage range setting).

    - o Window triggering - Allows for triggering on signals outside of a window defined by the level control.

    - o External triggering is standard.

10. Pre-trigger viewing - Allows for displaying that portion of the waveform which occurred before the trigger. Five selectable settings are standard (0 to 100% pre-trigger).

11. Operates in manual or auto triggering modes.

    - o Manual provides single shot operation; the ability to expand or contract the record by changing recorder chart speeds and the ability to make multiple copies of an event/test.

    - o Auto mode allows trigger circuit to be automatically armed after an event has been captured and displayed on a recorder. This provides the ability to retain multiple events on permanent records.

12. Operates as a real time recorder and/or transient recorder.

    - o Real time data can be displayed and events are recorded and dumped from memory only upon a trigger. Recorder goes back to real time recording and looks for another trigger.

13. Wide frequency range - DC up to 50,000 Hz.

14. Set-up requires no calculations - simply select highest frequency.

15. Multi-range signal input - 50 millivolts to 500 volts.

16. Automatic error signal monitoring - unattended start-stop operation or chart speed multiplication.

17. Single-ended inputs - operates grounded, or floating up to 500 volts off-ground.

18. Up to 8192 data words of storage with eight bit resolution.

19. Select up to 100% pre-trigger data.

20. Operates as high frequency DC amplifier or a waveform storage module.

1.2 SPECIFICATIONS

Frequency Measurement Range

Using 10 samples per cycle ..... DC to 20,000Hz.
Using 6.6 samples per cycle ..... @ 50,000Hz.

Sampling Rate ..... 500Hz to 333 KHz.

Storage Capacity ..... 4096 data words with 8-bit resolution, expandable to 8192 words. Switch selectable to 2048, 4096, or 8192 words.

Record Time Sequence (4K memory) ..... 12 ms to 8 sec.

Amplitude Input Range ..... 50 millivolts to 500 volts full scale.*

Attenuator Steps ..... 13 ranges + OFF (.05, .1, .25, .5, 1.0, 2.5, 5.0, 10.0, 25, 50, 100, 250, 500 V.F.S.).

Input Coupling ..... Direct and AC coupling (-3dB @ 2 Hz ±.5 Hz).

Input Circuit ..... Single-Ended (all eight channels have a common "low" that can be tied to earth ground, or floating).

Input Impedance ..... 1 Megohm shunted by a maximum of 55 pF. 5 pF change between x1 and x100 ranges is typical.

Input Signal Filter ..... Low-pass. 24dB/octave cut-off prevents aliasing.

Time Base ..... 10 MHz crystal controlled master clock.

Common Mode Rejection (Floating Mode Only)

DC ..... 90dB minimum.
AC @ 60 Hz ..... 75dB minimum.

Variable Ranges ..... Potentiometer reduces signal to less than 40% to allow overlapping ranges.

Input Connector ..... Triaxial BNC types mounted on rear panel.

Channels ..... 4, 6 and 8.

Inaccuracies ..... .01% of Master Clock, frequency TBD.

Output Circuit ..... Single-ended to Common.

Resolution

Store Mode ..... .8 bits cover ±F.S. volts input (approximately .8 div/bit on 100 div. chart). 7 bits actually displayed on chart.

*Up to 1500 volts full scale with optional high voltage probe.

Operating Temperature ..... 0 to +43° C.

Storage ..... -40° C to +70° C.

Humidity ..... 95% at 32° C non-condensing.

Power Input

Voltage AC ..... 115V RMS ±10% @ approximately. 90 watts.

Power Requirements ..... 115VAC ±10%, 50-60 Hz.
230 VAC ±10%.

Weight ..... 32 lbs. (14.5 kilograms).

Dimensions ..... 6.625 " x 17.625" x 14.0".

Trigger Arming Modes ..... Automatic or manual.

Recording Modes ..... 0%, 25%, 50%, 75%, or 100% of pre-trigger data.

Output Data Rate ..... 200 data points per second.

Output Voltage ..... ±5.0 volts into 2 Kohms or greater.
Shunted by a maximum of 5000 pF.

Output Impedance ..... Less than 5 ohms.

Gain Inaccuracy (With no channels overloaded).

"Amp" Mode ..... .3% of full scale.

"Store" Mode ..... 2.0% of full scale.
(includes quantization and non-linearity errors) measured on a stored waveform.

Instability

Zero With Temperature

Amp Mode ..... .06% of full scale/° C.
Store Mode ..... .15% of full scale/° C*.

Gain with Temperature

Amp Mode ..... .06% of full scale/° C.
Store Mode ..... .08% of full scale/° C*.

Zero with Line (10% line change)

Amp Mode ..... .05% of full scale.
Store Mode ..... .12% of full scale*.

Gain with Line (10% line change)

Amp Mode ..... .05% of full scale.
Store Mode ..... .16% of full scale*.

*May exhibit ±1 bit quantizing error (±40mV at output).

Zero with Time

Amp Mode ..... .1% of full scale for 24 hours.
Store Mode ..... .1% of full scale for 24 hours*.

Gain with Time

Amp Mode ..... .1% of full scale for 24 hours.
Store Mode ..... .1% of full scale for 24 hours.

Frequency Response

Store Mode ..... Flat from DC to less than ±1 dB at 20 KHz.
Ranges up to 20 KHz
Includes sampling spectrum errors.
Checked on stored waveform. -3 dB @ 55 KHz ±5 KHz.

50 KHz Range..... Flat from DC to 1.5 dB at 50 KHz.
-3 dB @ 65 KHz ±5 KHz.

Amp Mode ..... Flat from DC to less than ±1 dB at 50 KHz.

Plotting Mode

Rate .....Fixed 200 points per second on all ranges.

Calibration .....50mm/sec on 2800 recorder.

Plot Delay.....300 ms or 3 second selectable delay to allow the recorder to come to speed.

Event Marker

Output Range ..... Contact closures synchronized with trigger point.

Non-Linearity

Amp Mode ..... .2% of full scale.

Maximum Input Voltage.....500 VDC or 120 Vrms 60 Hz floating common to chassis.
Overvoltage time on analog input is 30 seconds at 500 VDC;
300 VDC or RMS continuous overvoltage.

Common Connector .....BNC type mounted on rear panel for floating common.

Ext. Analog Trigger.....Triaxial BNC mounted on the rear panel for external analog trigger signal. Maximum input ±50 VDC. Input impedance 50 Kohm.
When AC coupled signal passes through a high pass filter, -3 dB @ 9 Hz.
Maximum input voltage 100 volts.

Triggering

Internal ..... On channel-one only. A front panel control selects the type of voltage level triggering (above, window, below). A level control sets the level from 0 to ±100% of full scale.

External .....Digital: Opto-coupled (270 ohm in series with opto-coupler LED), requires 20 mA maximum from an externally supplied source.

Analog. . . . . Adjustable between ±50V by the level control. +50V = ±100%, -50V = -100% on front panel display.

Zero Inaccuracy (with no channels overloaded)

Amp Mode . . . . . .5% of full scale.
Store Mode . . . . . 1.4% of full scale.

Attenuator Inaccuracy . . . . . Range to Range ±.16%. x1/x100 = .2%.

Trigger Point Indicator . . . . . Opto-Coupler open collector output to indicate trigger point. For use with 2000S annotation. Output will sink 10 mA max., max voltage = 30 volt.

Noise (Amp mode sampling spectrum noise)

Armed. . . . . (2 μsec. noise pulse, frequency is 10 times timebase range frequency, 6.6 times on 50 KHz range superimposed on 60 Hz noise).

DC-100 Hz (50 KHz timebase) . . . . . 50mV P-P
DC-30 KHz (50 KHz timebase) . . . . . 150mV P-P
DC-1 MHz (50 KHz timebase) . . . . . 250 mV P-P

Unarmed . . . . . (10 μsec. noise pulse, frequency is 200 Hz superimposed on 60 Hz. noise).

DC-100 Hz . . . . . 50mV P-P
DC-30 KHz . . . . . 150mV P-P
DC-1 MHz . . . . . 275mV P-P

Amp Mode . . . . . 60 Hz. noise (on x1 - .050 V.F.S. and decreases with decrease in sensitivity) <40mV P-P.

Store Mode . . . . . Noise checked on stored waveform <15 mV P-P.

Crosstalk . . . . . >80 dB channel to channel.

Reconstruction Filter

Store Mode Only. . . . . Low pass 4-pole optimized for maximum sine wave flatness and minimum step response overshoot. -3 dB @ 79 Hz. Attenuation after cutoff is 24 dB per octave.

1.3 ACCESSORIES

BNC Connector (1 supplied) 285463
Triaxial BNC Connector (8 supplied) 296605
Signal D Connector (Female 9 pin) 244550
Signal D Connector (Male 9 pin) 245537-9
Analog Harness 8 Channel. 896452
Digital Harness 896451
Speed Control Cable Assembly 896642
Input Signal, Waveform, Triax to Alligator Clip 11-4310-03
Analog Harness 6 Channel. 896588
Analog Harness 4 Channel. 896591
Adapter - Triaxial to BNC 296661

SECTION II

INSTALLATION

2.1 GENERAL

This section describes the checks and inspections that should be made upon receiving the Gould Multi-Channel Amplifier/Signal Digitizer, Model Number 13-4XX6-00. It covers installation procedures, signal input connections, and outline dimensions.

2.2 INITIAL INSPECTION

Prior to attempting any electrical connections or operation, visually examine the unit for broken or loose knobs, dented or nicked panels and broken or chipped rear connectors.

2.3 SIGNAL CONNECTIONS

2.3.1 Rear Panel Controls and Connectors (Refer to Figure 2-1)

1. J-7 Analog Output Channels 1-4 (Female - "D" Type 9 Pin Connector) (8 Channel Version)

   A. Channel 1 - Pin 1 (Hi), Pin 6 (Low)
   B. Channel 2 - Pin 2 (Hi), Pin 7 (Low)
   C. Channel 3 - Pin 3 (Hi), Pin 8 (Low)
   D. Channel 4 - Pin 4 (Hi), Pin 9 (Low)
   E. Pins 5 thru 9 are connected to Common.

   J-6 Analog Output Channels 5-8 (Female - "D" Type 9 Pin Connector) (8 Channel Version)

   A. Channel 5 - Pin 2 (Hi), Pin 6 (Low)
   B. Channel 6 - Pin 3 (Hi), Pin 7 (Low)
   C. Channel 7 - Pin 4 (Hi), Pin 8 (Low)
   D. Channel 8 - Pin 5 (Hi), Pin 9 (Low)
   E. Pins 1 and 6 thru 9 are connected to Common.

2. J7 Analog Output Channels (Female - "D" Type 9 Pin Connector) (6 Channel Version)

   A. Channel 1 - Pin 2 (Hi), Pin 7 (Low)
   B. Channel 2 - Pin 3 (Hi), Pin 8 (Low)
   C. Channel 3 - Pin 4 (Hi), Pin 9 (Low)
   D. Pins 1, 5, and 6 connected to Common.

   J6 Analog Output Signal Connections (Female - "D" Type 9 Pin Connector) (6 Channel Version)

   A. Channel 4 - Pin 2 (Hi), Pin 6 (Low)
   B. Channel 5 - Pin 3 (Hi), Pin 7 (Low)
   C. Channel 6 - Pin 4 (Hi), Pin 8 (Low)
   D. Pins 1, 5, and 9 connected to Common.

3. J7 Analog Output Channels (Female - "D" Type 9 Pin Connector) (4 Channel Version)

   A. Channel 1 - Pin 1 (Hi), Pin 6 (Low)
   B. Channel 2 - Pin 3 (Hi), Pin 8 (Low)
   C. Pins 2, 4, 5, 7 and 9 connected to Common.

   J6 Analog Output Channels (Female - "D" Type 9 Pin Connector) (4 Channel Version)

   A. Channel 3 - Pin 3 (Hi), Pin 7 (Low)
   B. Channel 4 - Pin 5 (Hi), Pin 9 (Low)
   C. Pins 1, 2, 4, 6 and 8 connected to Common.

4. J-4 Digital Chart Drive Control and Trigger Point (Male "D" Type 9 Pin Connector)

   A. Pin 6 Common - (to 2000S-J102-8)
   B. Pin 3 Enable - (to 2000S-J102-6)
   C. Pin 9 Stop - (to 2000S-J102-1)
   D. Pins 4 and 5 - Event Marker (to 2000S TB101 Event Marker)
   E. Pins 1 and 2 are to be connected together.
      Pin 7 (Hi), Pin 8 (Low). Trigger Point Signal is an Opto-coupled transistor output.

NOTE 1: Pins 1, 2, 3, 6 and 9 are relay contact closures with 600 mA maximum contact current.

NOTE 2: Pins 4 and 5 are relay contact closures with 250 mA maximum contact current.

5. J-3 External Control Inputs (Male "D" Type 9 Pin Connector)

   A. Trigger Disable - Pin 5 (Hi), Pin 4 (Low)
   B. Plot Holdoff - Pin 6 (Hi), Pin 7 (Low)
   C. External Digital Trigger - Pin 1 (Hi), Pin 2 (Low)

NOTE: All inputs are opto-coupler inputs (270 ohms in series with opto-coupler LED), requires a 20 mA maximum current from an externally supplied +5 volt source to activate.

6. Analog Signal Inputs - 4, 6 or 8 Triaxial BNC connectors (supplied).

7. External Analog Trigger Input - Triaxial BNC connector.

8. Common - BNC connector with center tied to system common, shell to chassis (supplied).

9. Line Select

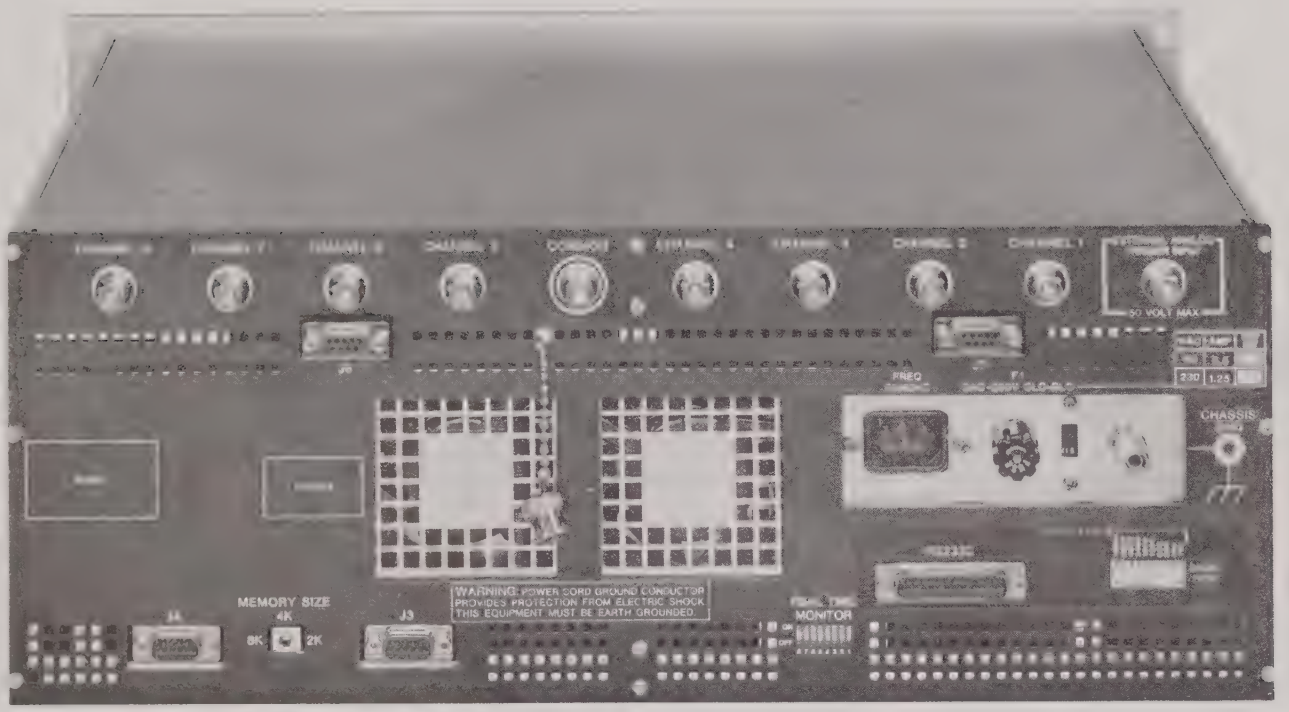

bi 2427

FIGURE 2-1 REAR PANEL CONTROLS AND CONNECTORS

A. Two position slide switch selects 115 VAC or 230 VAC input.

10. Chassis Connection

A. Five way binding post to connect.

11. Real Time Enable

A. Eight individual switches to enable real time data to pass through WFR when WFR is in the store mode and armed. This data is filtered and -3 dB down at 79 Hz. Real time data is selectable on a per channel basis by an 8 position DIP switch.

12. Memory Size Select (S2)

A. A three position slide switch to select 2K, 4K or 8K data bytes per channel.

13. Power Input

A. I.E.C. type three prong male plug.

2.3.2 Internal Controls

1. Digital Board (refer to Figure 2-2).

A. Plot Delay (S3) - A two position slide switch that selects 300 msec. or 3 sec. time delay for chart acceleration before data plotting on an external device begins.

B. Norm/Test (S1) - A two position rocker switch used for factory automatic testing.

C. R1 - System voltage reference adjustment.

2. Front Panel Board (refer to Figure 2-3).

A. CX02 - "X1/X100" switch frequency compensation adjust.

B. R18 - Offset adjust U2 (Trigger Circuit).

C. R28 - Digital Display Full Scale Adjust.

3. Analog Board (refer to Figure 2-4).

A. RX03 - Offset Adjust UX1.
B. RX19 - Offset Adjust UX3.
C. RX34 - Offset Adjust UX5.
D. RX32 - Offset Adjust UX9.
E. RX18 - Gain Adjust.
F. RX31 - Gain Adjust.
G. S1 - Norm/Gnd. Switch for Sample/Hold Calibration.

NOTE: "X" in the above designations indicates numbers 1, 2, 3, 4, 5, 6, 7, 8 for channels 1 thru 8.

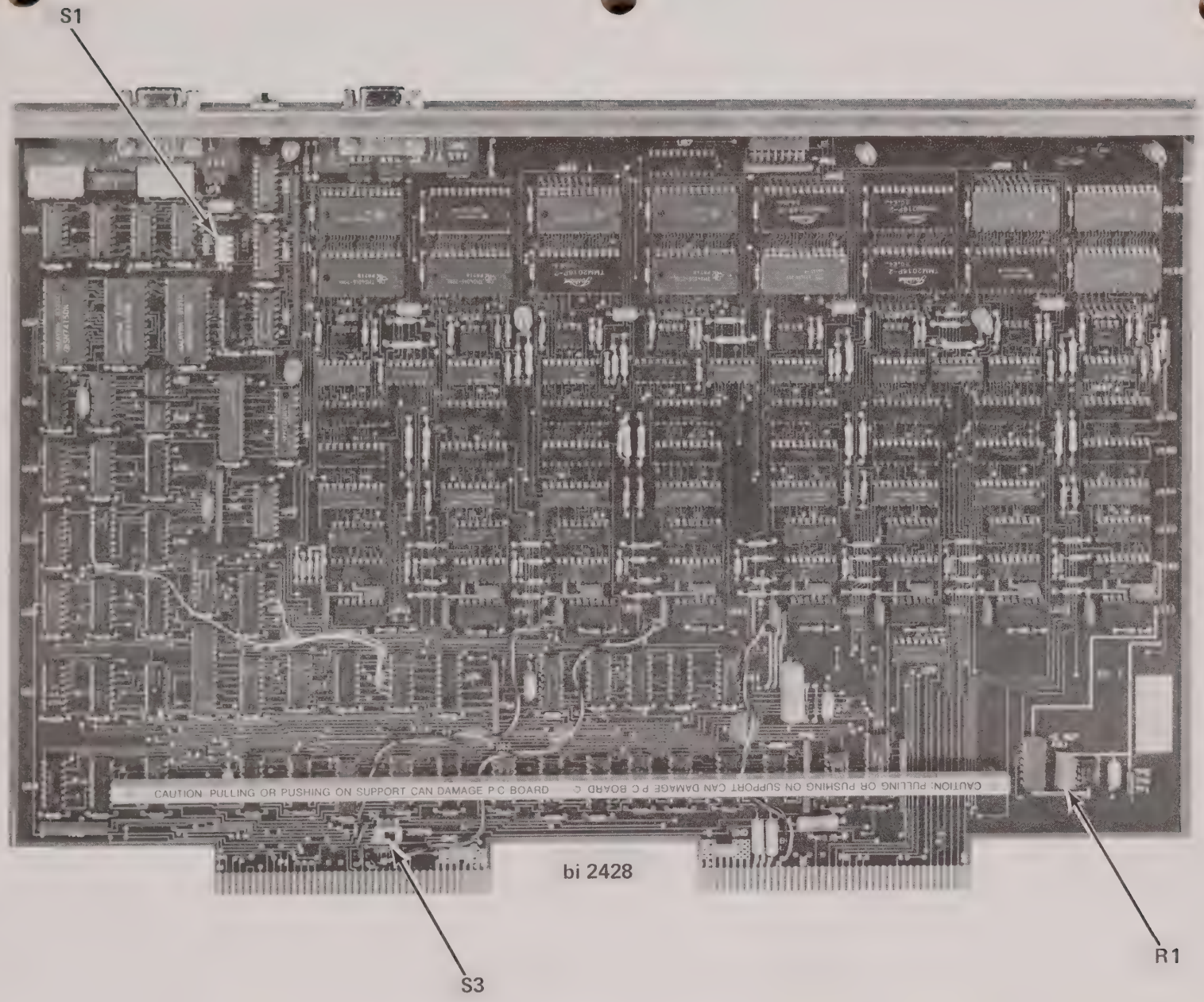

FIGURE 2-2 DIGITAL BOARD INTERNAL CONTROLS

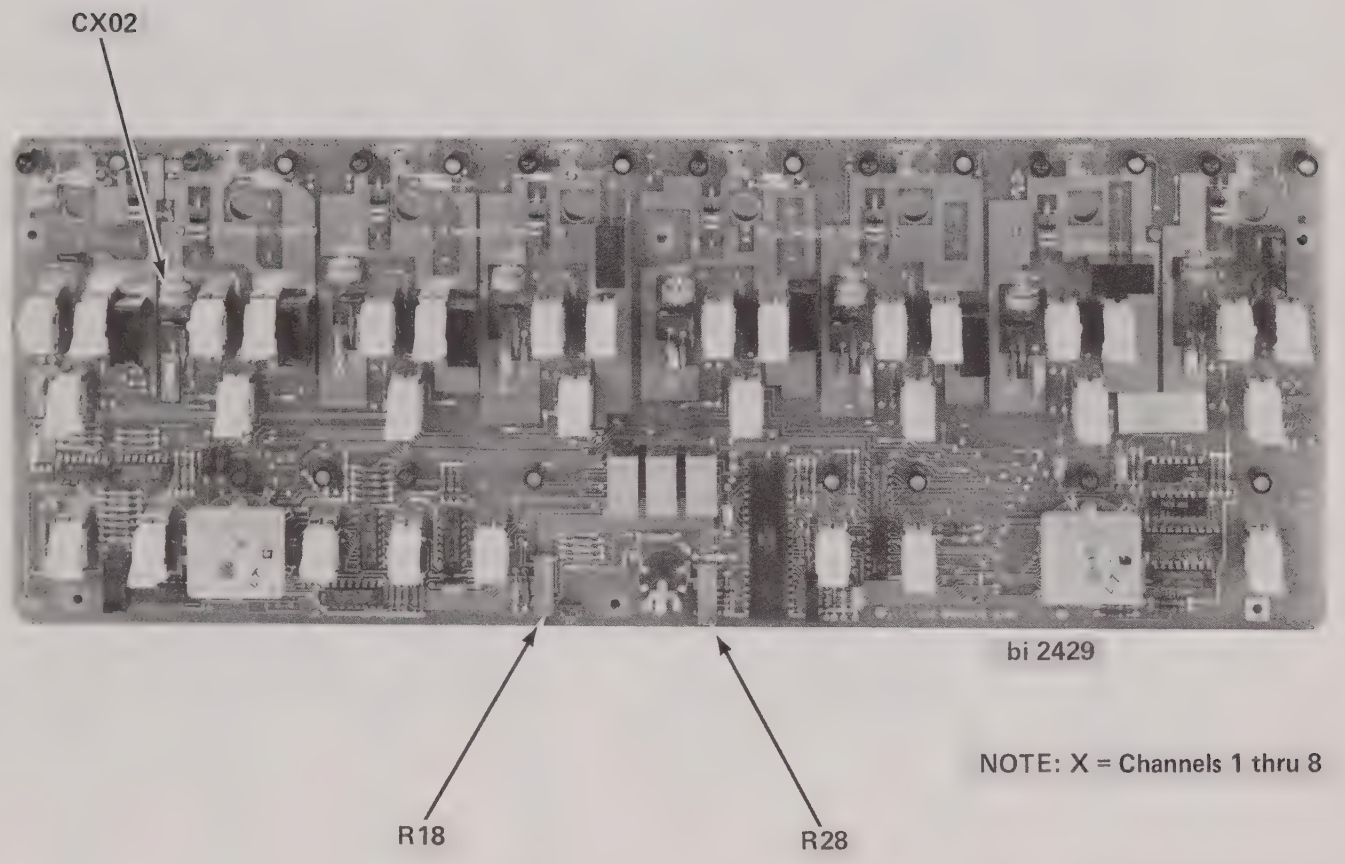

FIGURE 2-3 FRONT PANEL BOARD

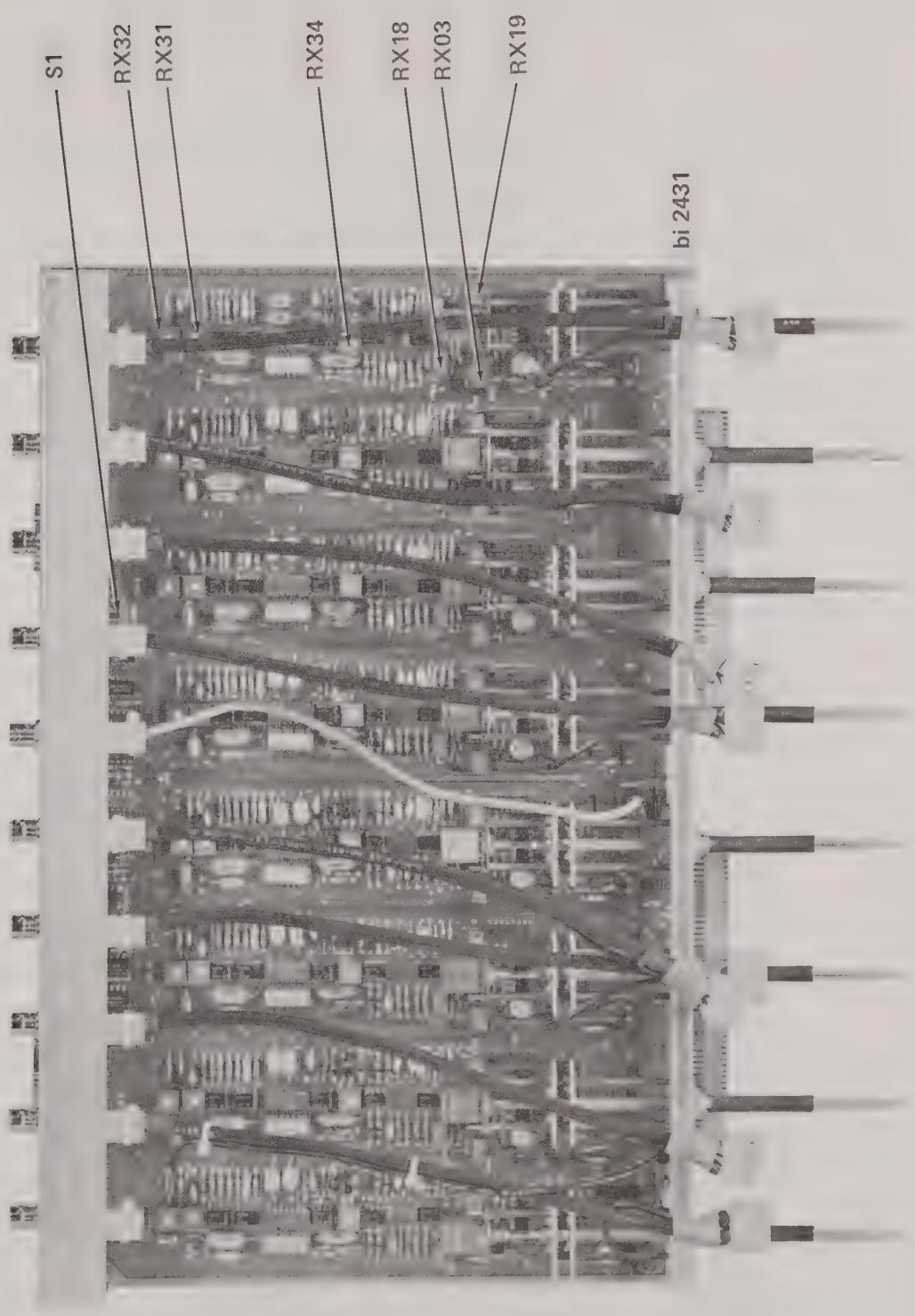

FIGURE 2-4 ANALOG BOARD

2.3.3 Digital Output

1. Internal

   A. Interface Connector J3 Pin Assignments (Table 2-1).

TABLE 2-1

Pin No.	Signal Name	Pin No.	Signal Name
1	+5 VDC	41	DIG GND
2	+5 VDC	42	$\overline{\text{RDATA}}$
3	+5 VDC	43	DIG GND
4	+5 VDC	44	DIG GND
5	DIG GND	45	$\overline{\text{RESET INF}}$
6	DIG GND	46	DIG GND
7	DIG GND	47	MRDCMP GND
8	DIG GND	48	CHDATA 0
9	+15 VDC	49	$\overline{\text{MRDCMP}}$
10	+15 VDC	50	CHDATA 1
11	ANA GND	51	DIG GND
12	ANA GND	52	CHDATA 2
13	-15 VDC	53	$\overline{\text{INF XMIT LED}}$
14	-15 VDC	54	CHDATA 3
15	*	55	AUTO/MAN
16	*	56	CHDATA 4
17	*	57	*
18	*	58	CHDATA 5
19	*	59	*
20	*	60	CHDATA 6
21	*	61	*
22	*	62	CHDATA 7
23	*	63	X1/$\overline{\text{X100}}$
24	*	64	DIG GND
25	*	65	UNCAL/$\overline{\text{CAL}}$
26	*	66	$\overline{\text{INFENB}}$
27	$\overline{\text{CDSTRB}}$ GND	67	$\overline{\text{VFSCL2}}$
28	$\overline{\text{CDSTRB}}$	68	$\overline{\text{REXMIT}}$
29	DIG GND	69	VFSCL1
30	OFF	70	$\overline{\text{INFARM}}$
31	MSZ/PT3	71	$\overline{\text{VFSCL0}}$
32	TMBSE 3	72	INFBSY
33	MSZ/PT2	73	$\overline{\text{DIG GND}}$
34	TMBSE2	74	$\overline{\text{WFR BSY}}$
35	MSZ/PT1	75	$\overline{\text{CHSEL 2}}$
36	TMBSE1	76	$\overline{\text{XMIT}}$
37	MSZ/PT0	77	CHSEL 1
38	TMBSE 0	78	WFR 4
39	DIG GND	79	CHSEL 0
40	RDATA GND	80	WFR 6

*Pins used by waveform recorder, not for use by external interfaces.

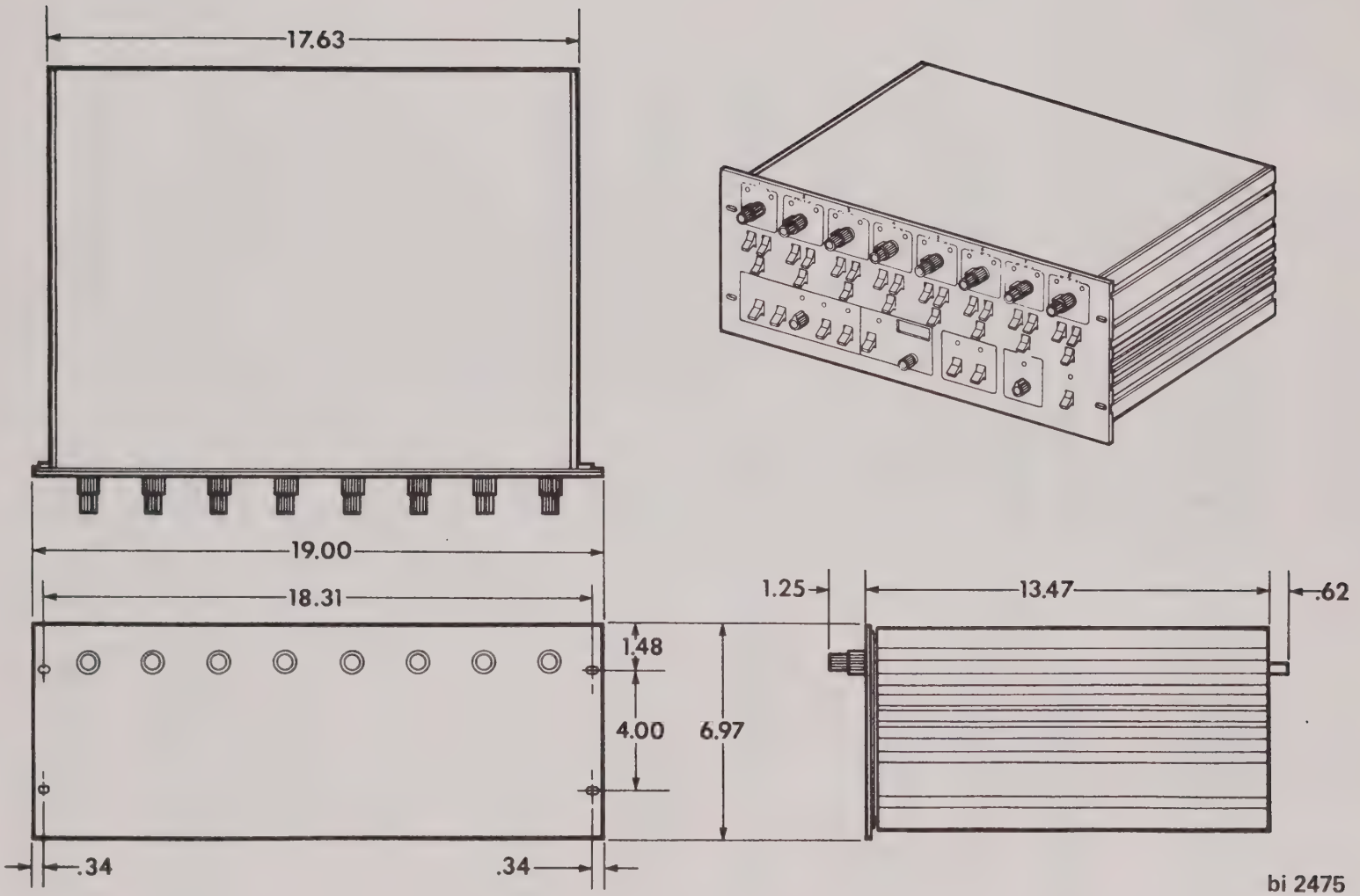

FIGURE 2-5 OUTLINE DIMENSIONS

SECTION III

OPERATION

3.1 GENERAL

This section describes and illustrates the controls of the Multichannel Amplifier/Signal/Digitizer Recorder and provides instructions for proper operation. Before attempting to use the recorder it is imperative that the operator completely understand the functioning of the controls and the required input/output specifications.

3.2 FRONT PANEL CONTROLS

The items listed below correspond to controls shown in Figure 3-1. See Section II for a description of rear panel controls.

TABLE 3-1 FRONT PANEL CONTROLS

ITEM	CONTROL	DESCRIPTION
1	DX01 (Overrange LED)	A red LED to indicate the signal has reached 90-95% of the maximum allowable input voltage.
2	DX02 (Uncal LED)	A red LED to indicate the amplifier is uncalibrated.
3	SX1-A, SX1-B (Volts Full Scale Switch)	An eight position rotary switch with an "OFF" position and 7 voltage ranges from .05 to 5.0 V.F.S.
4	RX07 (Sensitivity Control)	Decreases output to less than 40% to allow overlapping ranges. This control is an integral part of the Volts Full Scale Switch.
5	AC/DC Coupling (SX12)	A toggle switch to select AC/DC coupling to the Trigger section. This allows triggering from an AC signal riding on a DC level. The AC coupled signal passes through a high pass filter, -3 dB @ 9 Hz ±2 Hz.
6	Amp/Storage (SX14)	A toggle switch to select the channel for storage or as an amplifier.
7	X1/X100 (SX13)	A two position toggle switch to multiply the volts full scale range setting by 1 or 100.
8 (items 8 thru 19 concern triggering)	Int/Ext Analog/ Ext. Digital (S1)	A three position toggle switch selecting the trigger signal source: either internal analog from channel 1, external analog from a rear panel BNC connector or an external digital signal from rear panel J3 connector.
9	AC/DC Coupling (S6)	A two position toggle switch selecting an AC coupled signal or AC/DC signal for the trigger circuit.

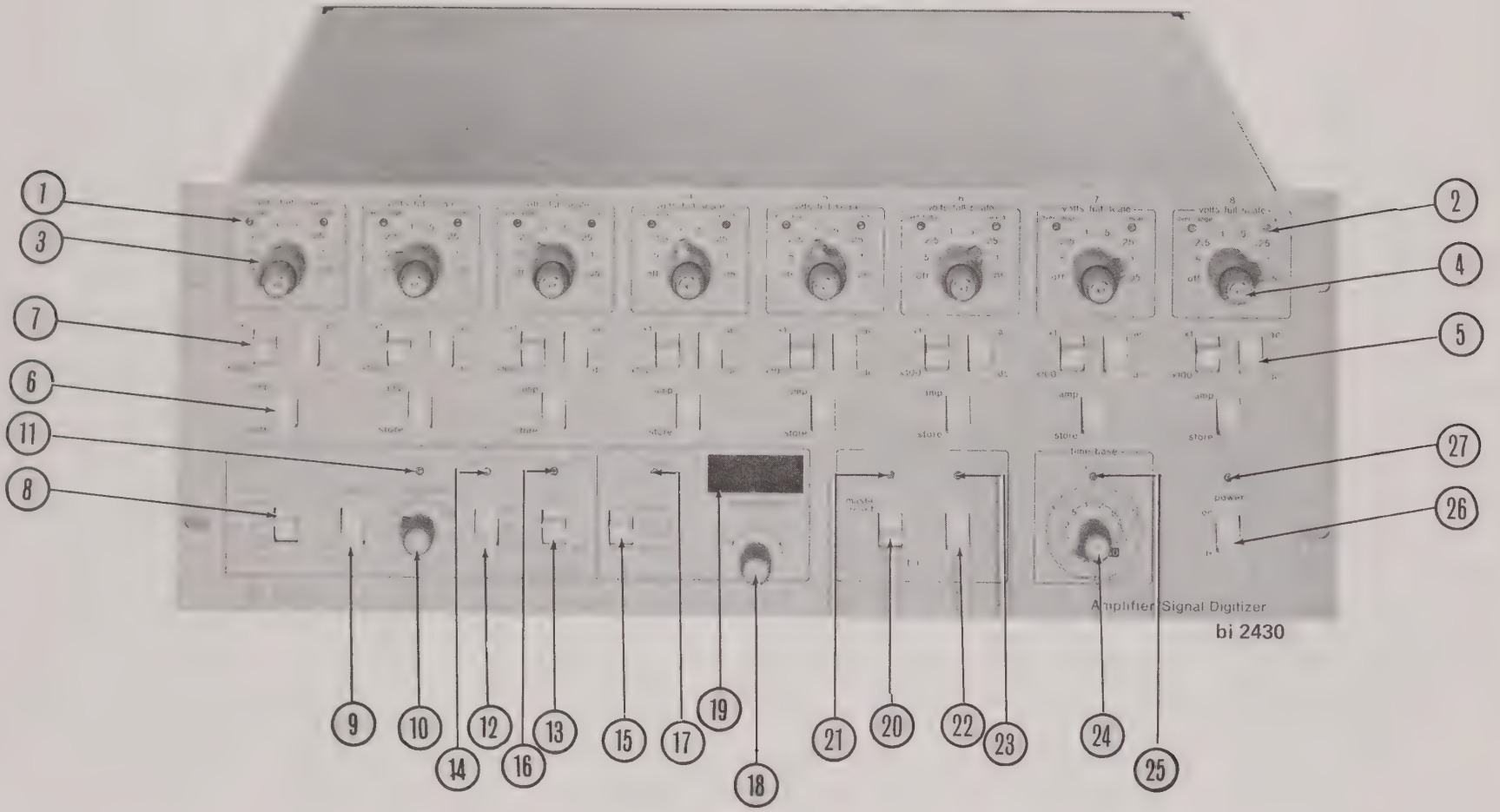

FIGURE 3-1 FRONT PANEL CONTROLS

TABLE 3-1 FRONT PANEL CONTROLS (continued)

ITEM	CONTROL	DESCRIPTION
10	Pretrigger Delay Selector (S9)	A 5 position selector Switch that selects 0, 25, 50, 75, or 100 percent of the recording period to occur immediately prior to the trigger signal. The recorder will make sure the proper amount of Pretrigger information is present before allowing a trigger to occur.
11	D5 (Pretrigger Error)	A red LED located above the % Pretrigger switch that will light if either the % Pretrigger or Memory Size switch settings are changed after the WFR is armed. If armed, the WFR will disarm itself. If the Auto-Off-Manual switch is in the Auto position the WFR will automatically rearm itself.
12	Trigger Mode Selector (S3)	A three position toggle switch that is used to select the trigger mode of operation. "Auto-Off-Manual".
	Auto	If in the "Auto" mode the recorder will automatically look for a trigger after a recording-plotting cycle has been completed. No external arming is necessary.
	Off	In this mode the recorder will disarm itself so front panel control settings can be made without false triggering the recorder.
	Manual	In the "Manual" mode the user can "Arm" the recorder via a front panel "Arm" switch (S4). Each recording cycle must be armed separately. Arming status of the recorder will be indicated by a front panel LED. This LED will be on when the recorder is looking for a trigger or filling the memory with pretrigger data. When a trigger is found and recording starts, the LED turns off.
13	Arm (S4)	A momentary switch that arms the recorder if the trigger mode selector switch is in the "Manual" setting.
14	D3	A red LED to indicate the recorder has been triggered and is recording post trigger data.
15	Above/Window/Below (S5)	A three position toggle switch that selects whether waveform recording can be triggered in the region above, below, or outside a window, set by trigger level control.
16	D4	A red LED to indicate the recorder is armed.
17	D7 (Triggered LED)	A red LED to indicate the trigger level has been reached by the input signal.

TABLE 3-1 FRONT PANEL CONTROLS (continued)

ITEM	CONTROL	DESCRIPTION
18	Trigger Level Control (R19)	A vernier control that allows selection of a trigger voltage reference level. The control multiplies from -100 to +100 percent of the input volts full scale switch setting. This control is used in combination with the Above/Window/Below three position toggle switch.
19	DS1, DS2, DS3	A 2 1/2 digit LED display to indicate the percent of full scale that the trigger level is set at. Display will read ±100%.
20	Re-plot/Re-Xmit (S7) Master Reset	A three position (two momentary) toggle switch. When pushed down will either re-plot or re-transmit the stored data depending on the position of the Plot/Plot-Xmit/Xmit switch. When pushed up the WFR will be reset and stored data will be lost. This switch is used in conjunction with the plot switch.
21	D2	A red LED to indicate the interface is busy.
22	Plot/Plot-Transmit/Transmit (S8)	This is a three position toggle switch. With the plot mode selected, the recorder will record information then plot it. In the plot-transmit mode, the recorder will plot the information then transmit it to the interface. In the transmit mode, the recorder will transmit to the interface only. If no interface is installed, the information will be plotted.
23	D1	A red LED to indicate the interface is transmitting.
24	Timebase Selector (S10)	A 10 position rotary switch that selects the rate at which the input voltage is to be sampled and converted to a digital number, and stored in memory. Each position of the timebase selector switch has three recording parameters illustrated.

Time/Point	Bandwidth	Time/CM
3 μsec	50 KHz	.08 ms/CM
5 μsec	20 KHz	.2 ms/CM
10 μsec	10 KHz	.4 ms/CM
20 μsec	5 KHz	.8 ms/CM
50 μsec	2 KHz	2 ms/CM
.1 msec	1 KHz	4 ms/CM
.2 msec	.5 KHz	8 ms/CM
.5 msec	.2 KHz	20 ms/CM
1 msec	.1 KHz	40 ms/CM
2 msec	.05 KHz	80 ms/CM

TABLE 3-1 FRONT PANEL CONTROLS (continued)

ITEM	CONTROL	DESCRIPTION
25	D6 (Timebase Error)	A red LED located above the Timebase switch that will light if the switch setting is changed after the WFR is armed. If armed, the WFR will disarm itself. If the Auto-Off-Manual switch is in the Manual position, the WFR must be manually rearmed. In the Auto position the WFR will automatically rearm itself.
26	Power ON (S11)	A two position switch allowing power to be applied and disconnected from the recorder.
27	D8 (Power On)	A red LED to indicate that power has been applied to the unit.

3.3 SIGNAL GLOSSARY* (WFR = Waveform Recorder)

1. Channel Select (CHSEL2 - CHSEL0) - A three line channel select code which accesses channel output data for each of 8 lines. Also selected are the Volts Full Scale, Uncal and x1/x100 status lines (refer to Table 3-2).

TABLE 3-2

CHANNEL	LINES	2	1	0
1		0	0	0
2		0	0	1
3		0	1	0
4		0	2	2
5		1	0	0
6		1	0	1
7		1	1	0
8		1	1	1

2. Interface Busy (INFBSY) - A line, which indicates that the interface is busy. If this line becomes inactive prior to its allotted time, the WFR will reset itself. See Interface Timing Diagram (refer to Figure 3-2).

3. Interface Arm (INFARM) - One line, which allows the interface to arm the WFR, if WFR is in manual arming mode.

4. Request Data Byte (RDATA) - One line, which is a data request from the interface for the WFR to send the next data byte from memory.

5. Re-transmit (REXMIT) - One line, which is an input signal to the WFR requesting another data transmission cycle.

6. Interface Enable (INFENB) - One line, indicating the interface board is installed.

7. Interface Transmitting (INF XMIT LED) - One line, which indicates the interface is in the process of transmitting data. This is a front panel indicator only. This signal must sink 20 mA maximum LED current.

8. Channel Data (CHDATA7 - CHDATA0) - 8 digital lines, channels 1 thru 8 are selected by channel select code input and applied to these data lines. Data is latched and stable 50 nsec after CDSTRB pulse.

***NOTE: These are the signals which ride the interface edge connector J3. (Not available to outside world).**

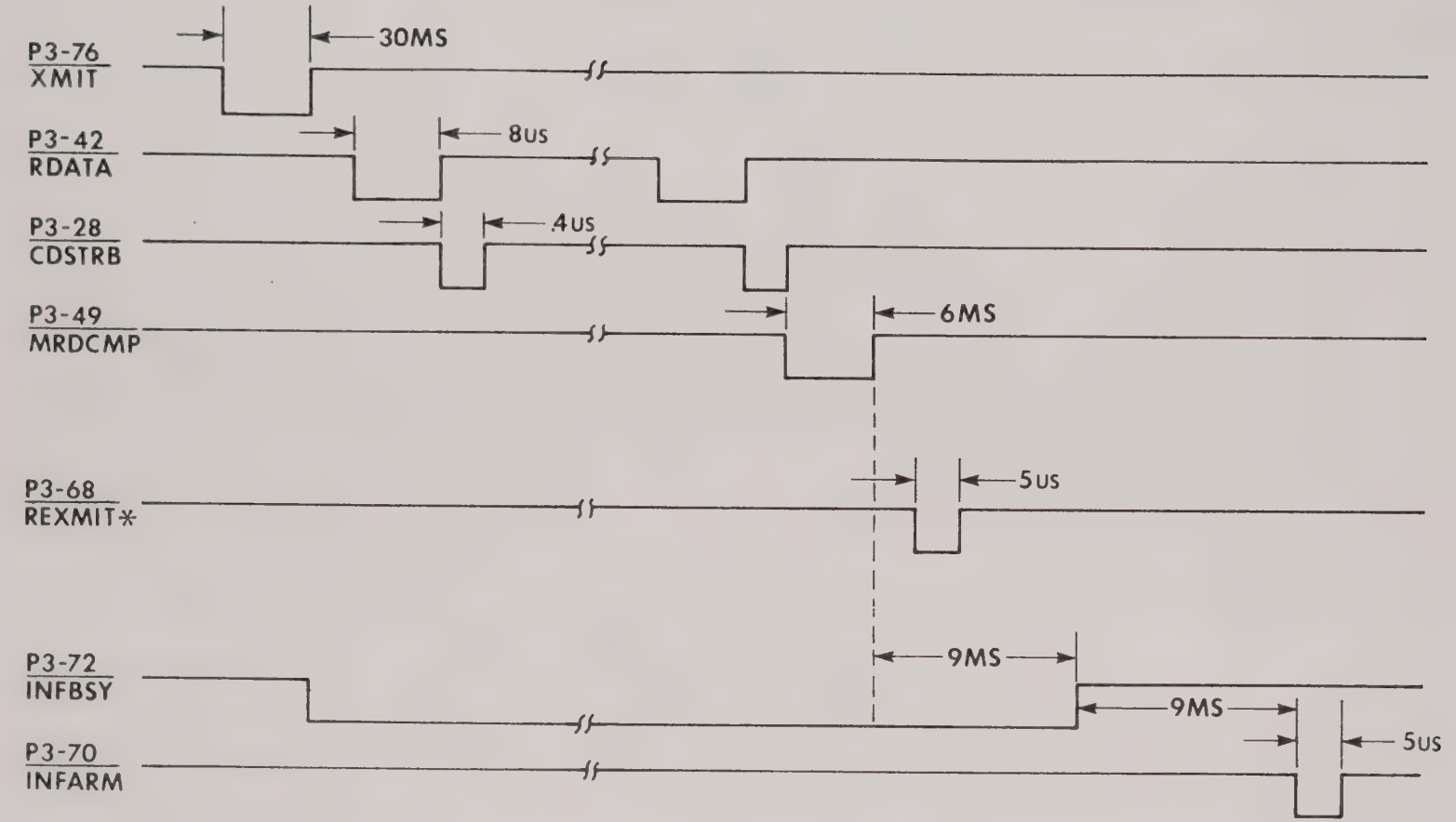

*REXMIT (RETRANSMIT REQUEST) IS ASSERTED ONLY IF ANOTHER DATA CHANNEL REQUIRES ACCESS.

bi 2490

FIGURE 3-2 INTERFACE TIMING DIAGRAM

9. Channel Data Strobe (CDSTRB) - One line, a response to data request input. Used by the interface to input the stored data being transmitted from the WFR.

10. Channel Volts Full Scale (VFSCL2 -VFSCL0) - 3 lines, a 3 bit code indicating the Volts Full Scale setting for each channel (includes offsetting) (refer to Table 3-3).

TABLE 3-3

VFS	LINES 2	1	0
OFF	1	1	1
5.0	1	1	0
2.5	1	0	1
1.0	1	0	0
.5	0	1	1
.25	0	1	0
.1	0	0	1
.05	0	0	0

11. Uncal/Cal - One line that indicates if the x1 sensitivity pot is in the uncal position. Channel selectable by CHSEL signal.

12. Channel x1/x100 Multiplier - One line which specifies the position of the x1/X100 multiplier switch. Channel selectable by the CHSEL signal.

13. Waveform Recorder Memory Size/% Pretrigger (MSZ/PT3-MSZ/PTO) - Four lines that indicate the internal configuration of the WFR memory size and % pretrigger front panel setting (refer to Table 3-4).

14. Time Base (TMBSE3 - TMBSE0) - Four lines, with a four bit code specifying the position of the front panel timebase selector switch (refer to Table 3-5).

TABLE 3-5

TIMEBASE RANGE	LINES 3	2	1	0
50 HZ	0	1	1	0
100	0	1	1	1
200	1	0	0	0
500	1	0	0	1
1 K	1	0	1	0
2 K	1	0	1	1
5 K	1	1	0	0
10 K	1	1	0	1
20 K	1	1	1	0
50 K	1	1	1	1

15. Mode (AUTO/MAN) - One line that indicates the position of the arming function switch setting.

16. Mode (OFF) - One line that indicates the Auto/Off/Manual arming switch is in the OFF position.

17. Transmit (XMIT) - One line which is a signal output from the WFR requesting a data transmission cycle.

18. Memory Read Complete (MRDCMP) - One line when (low) true, indicates that 2K, 4K or 8K bytes of data has been transmitted from a selected channel.

TABLE 3-4

Memory Size	% Pretrig	Lines 3	2	1	0
2K	0	0	0	0	0
	25	0	0	0	1
	50	0	0	1	0
	75	0	0	1	1
	100	0	1	0	0
4K	0	0	1	1	0
	25	0	1	1	1
	50	1	0	0	0
	75	1	0	0	1
	100	1	0	1	0
8K	0	1	0	1	1
	25	1	1	0	0
	50	1	1	0	1
	75	1	1	1	0
	100	1	1	1	1

19. RESET INF - One line, a contact closure to the WFR common front panel master reset switch. Maximum sink current is 80 mA.

20. Waveform Recorder Busy - One line that indicates the WFR is not available to communicate with the interface.

3.4 EXTERNAL SIGNALS

1. Connector J3

   A. Trigger Disable Input - An opto-coupled signal that disables any trigger both analog or digital from triggering the recorder.

   B. Plot Hold Off - An opto-coupled signal that prevents a plot or transmission of data until the signal is inactivated. If this line is pulsed after a plot has been completed, a second plot can be initiated.

   C. External Digital Trigger - An opto-coupled signal that will trigger the recorder when the opto-coupler is activated.

2. Connector J4

   A. Trigger Point - An opto-coupled output signal used to indicate the trigger time for 2000 Series annotation circuitry.

3.5 FUNCTIONAL CHECKOUT PROCEDURE

3.5.1 General

This procedure should be performed to verify correct operation of the Waveform Recorder. These tests also serve to acquaint the user with the instrument's basic operation, with separate sections specifically to cover triggering, use of the "window" control, pretrigger operation, and others.

Throughout this procedure you will often trigger the unit by adjusting the TRIGGER LEVEL control. This is a convenient way to run tests, but keep in mind that, in actual use, it is the signal into the trigger circuit that will vary. We simulate this action by changing the trigger level relative to a fixed signal.

NOTE: Channel one must always be one of the channels used since it is the trigger channel. By checking at least two channels at once, all eight may be checked by checking one and two, then one and three, etc. Of course, more can be checked at once if recorder channels and input connections are available.

NOTE: When checking readings on Waveform Recorder use ground for specific channel being checked. Always connect ground lead of input cable.

3.5.2 Equipment Required

1. AC/DC Sources Wavetek 178, Fluke 5200A or equivalent.

2. Multimeter (DMM) Keithley 177 or equivalent.

3. Oscillograph Gould 2800S, 2600S, 2400S, 2200S or ES1000 Recorder.

Connect the Waveform Recorder, connectors J-7 and J-6, to the oscillograph as instructed in paragraph 2.3 SIGNAL CONNECTIONS.

3.5.3 Set Front Panel Controls as follows:

VOLTS FULL SCALE (CH. 1-8).... 5 V.F.S.
PLOT/PLOT-TRANS/TRANSMIT ....PLOT
ABOVE/WINDOW/BELOW ..... ABOVE
AUTO/OFF/MANUAL.....OFF
% PRETRIGGER 0%
AC/DC COUPLING (TRIGGER) ..... DC
INT/EXT DIG/EXT ANALOG .. INTERNAL
TIMEBASE..... 0.05 KHz
X1/X100-CHANNEL 1-8 ..... X1
AC/DC-CHANNEL 1-8 ..... DC
AMP/STORE-CHANNEL 1-8 .....STORE
SENSITIVITY CONTROLS .... FULLY CW
TRIGGER LEVEL ..... +100%

Set Rear Panel Controls as follows:

MEMORY SIZE 2K
REAL TIME ENABLE .....OFF
2800 RECORDER .....OFF

3.5.4 Trigger Section

Apply a 1.5 V (rms), 50 Hz sine wave to each channel. Generate triggers and plots as stated in Table 3-6.

TABLE 3-6
MODES AND TRIGGERING

	OPERATION	OUTPUT	CHECK
1.	Press ARM	None	ARMED LED should not light.
2.	Select MANUAL	None	ARMED LED should not light.
3.	Press ARM	None	ARMED LED should light.
4.	Change Switch from MANUAL to OFF	None	ARMED LED should go out.
5.	Change Switch from OFF to AUTO	None	ARMED LED should light.
6.	Turn recorder on and run chart at 5mm/sec. speed. Rotate TRIGGER LEVEL slowly to 40%, then back to > 70% (NOTE: This generates a trigger.)		a. TRIGGERED LED comes on when the control is set to <42%. This is the level where the 1.5 V RMS (2.1 V peak) input signal, connected to channel 1 and therefore to the Trigger, matches the Trigger level setting (42% of 5, the V.F.S. setting = 2.1V). b. ARMED LED goes out. RECORDING LED comes on momentarily. c. When RECORDING LED goes out a 50 Hz sine wave is plotted on the chart as shown below.
		Plots a 50 Hz sine wave.	

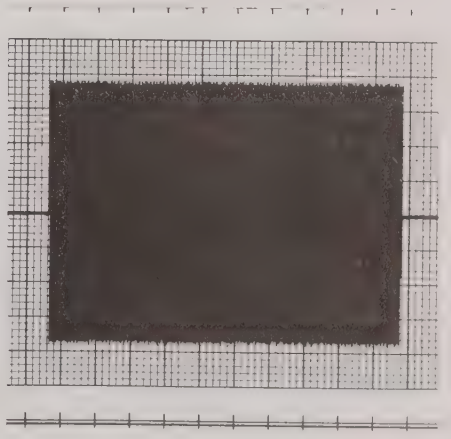

d. After plot is finished the ARMED LED comes back on.

NOTE: This checkout was done without the RS232C Interface option.

TABLE 3-6
MODES AND TRIGGERING

	OPERATION	OUTPUT	CHECK
7.	Rotate trigger level to 40%. After several plots return it to >+70%.	Several plots of a 50 Hz sine wave	Automatic retriggering of several plots. 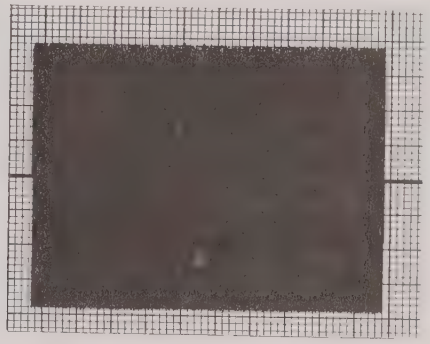
8.	Switch from AUTO to OFF to MANUAL.	None	ARMED LED goes out in OFF and stays out.
9.	a. Press ARM switch. b. Rotate TRIGGER LEVEL to 40% then back to >70%.	a. None b. Plots a 50 Hz sine wave.	a. ARMED LED should light. b. Unit should not rearm after plot.
10.	Change TIMEBASE switch to 2 KHz to slow down plotting for clarity. (MASTER RESET must be pressed after changing this switch). Repeat step 9.	TIMEBASE ERROR lite lites until reset.	Plots a 50 Hz sine wave, only expanded for easy analysis. Refer to Paragraph 3.5 for additional TIME-BASE set-up information. 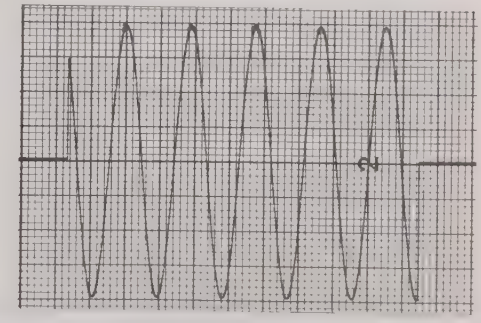
11.	Change signal generator to a TRIANGLE wave (1.5V). Press REPLOT.	Plots a 50 Hz sine wave.	SINE WAVE output as before.
12.	Change switch from PLOT to PLOT/XMIT. Press REPLOT switch.	Plots a 50 Hz sine wave	a. Plots a 50 Hz sine wave as before. b. INTERFACE BUSY LED should not come on after the plot is complete.

TABLE 3-6
MODES AND TRIGGERING

	OPERATION	OUTPUT	CHECK
13.	Change switch from PLOT/XMIT to XMIT mode. Press REPLOT switch.	Plots a 50 Hz sine wave.	Plots a 50 Hz sine wave as before. 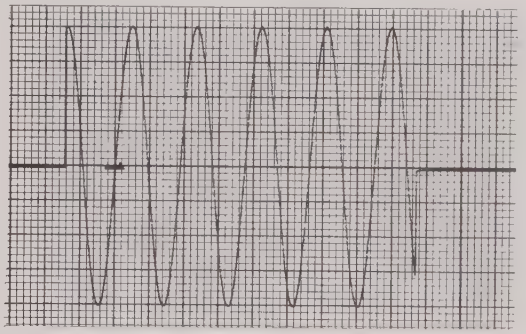
14.	Rotate TRIGGER LEVEL to 50% then back to >70%.	None	a. TRIGGERED LED should light at 52% and off at >70%. b. Unit should not plot because it was not armed.
15.	Press ARM. Repeat step 14.	Plots a 50 Hz Triangle wave.	Unit should not plot a 50 Hz TRIANGLE wave since re-arming refills the unit's memory.
16.	Select WINDOW, press ARM. Reduce TRIGGER LEVEL to 50% then to <-70%. (NOTE: less than minus 70%).	Plots a 50 Hz triangle wave.	50 Hz triangle triggering above window. 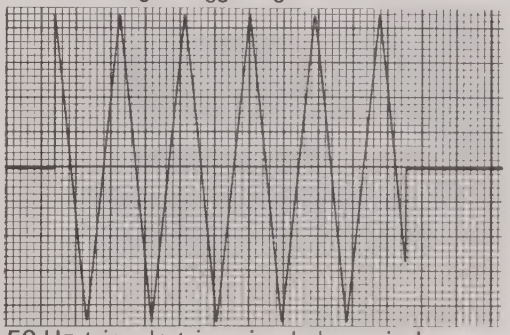
17.	Press ARM, rotate TRIGGER LEVEL to -50% then back to <-70%.	Plots a 50 Hz triangle wave.	50 Hz triangle triggering below window. 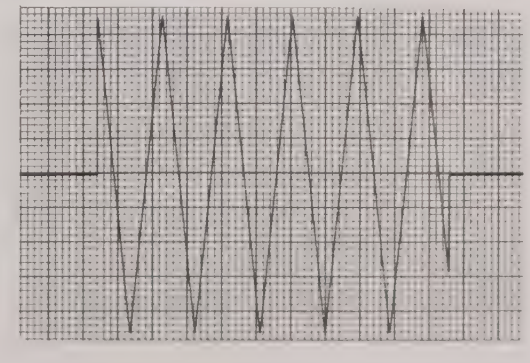

TABLE 3-6
MODES AND TRIGGERING

	OPERATION	OUTPUT	CHECK
18.	Select BELOW, press ARM, rotate TRIGGER LEVEL to -50% then back to >+70%.	Plots a 50 Hz triangle wave.	50 Hz triangle triggering below. 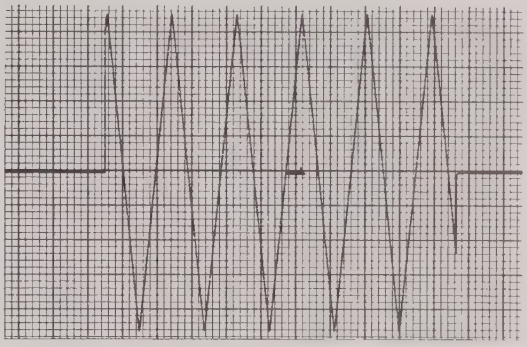
19.	a. Select ABOVE and PLOT. Press ARM. b. Press MASTER RESET.	None	a. ARMED LED lights. b. ARMED LED should go out.
20.	a. Press ARM. Reduce TRIGGER LEVEL to 0% then back to >+70%. b. After plotting has started press MASTER RESET.	a. Plot a 50 Hz triangle wave. b. Plotting of waveform should stop.	a. Plots a 50 Hz triangle wave. b. Recorder should stop plotting when MASTER RESET is selected. 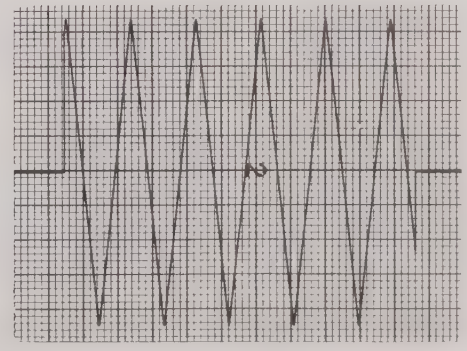

Refer to Section 3.5.5 for illustration of use of ABOVE/WINDOW/BELOW Operation. Also, refer to Section 3.5.7 for examples of AC coupling of trigger source, and Section 3.5.9 for use of EXTERNAL TRIGGER source.

3.5.5 ABOVE/BELOW/WINDOW Operation

a. Establish full scale sensitivity:

1. If maximum input signal amplitude is 5 volts or less, switch the X1/X100 toggle switch to X1 position.

2. Turn VOLTS FS switch to the maximum signal amplitude expected.

3. Turn the TIME BASE switch to the maximum signal frequency expected.

4. Switch the STORE/AMP toggle switch to STORE position.

5. Select desired recorder chart speed. Suggest 5mm/sec. (Set chart speed to STOP for stepper recorders wired for remote operation.

b. Establish trigger reference level:

1. Set % PRETRIG TRIG DELAY switch for ratio of information to be stored before and after occurrence of the trigger (suggest 25%). See paragraph 3.5.6 for more detailed PRETRIGGER instructions.

2. Select the region of trigger detection to be above, below, or outside a window using the ABOVE/WINDOW/BELOW toggle switch (see examples, Figure 3-3).

3. Set the TRIGGER LEVEL control to desired reference (percent of full scale.) This sets the limits of the regions mentioned in the previous step.

NOTE: In WINDOW mode, polarity of TRIGGER LEVEL setting doesn't matter.

4. Set AUTO/OFF/MANUAL toggle switch to MANUAL. Momentarily press ARM to arm the unit.

System is now ready to receive Trigger and Plot.

3.5.6 Use of % PRETRIGGER and Unattended Transient Monitoring

1. Select STOP on the recorder CHART SPEED control.

In order to perform this procedure the Event Marker on the oscillograph recorder must be connected to the Trigger Point signal. Refer to Section 2.3.1 step 3 for this wiring information or use accessory cable 896451. This cable assembly is connected from J4 of the Waveform Recorder to J102 (Remote) of the 2000S oscillograph recorder and the two loose green and white wires connect to TB101 Event Left or Right Marker.

With all J-4 connections complete, the following procedure demonstrates how UNATTENDED TRANSIENT MONITORING may be accomplished. The recorder chart drive will be automatically started and stopped after a triggered event is recorded, plotting the entire sample. If the AUTO/OFF/MANUAL switch is left in MANUAL and the unit manually armed, only one event will be plotted, but that event will remain stored and may be replotted or transmitted later as desired. If the switch is left in AUTO, every event triggering the unit will be plotted but the automatic re-arming continually erases and refills the unit's memory.

NOTE: Cable Assembly 896451 is wired for pre-determined speed of 50mm/sec. If cable assembly is not available, chart speed must be run at 50mm/sec to obtain accurate readings in Table 3-7 (refer to the 2000S recorder manual).

2. For each of the settings (0% thru 100%) in Table 3-7 perform the following:

a. Select PRETRIGGER range.

b. Select ABOVE trigger region and set TRIGGER LEVEL to +100%.

c. Depress the ARM switch.

d. Generate a trigger by reducing the TRIGGER LEVEL to 0% and then returning it to $\geq$+70%.

FIGURE 3-3 TRIGGER EXAMPLES

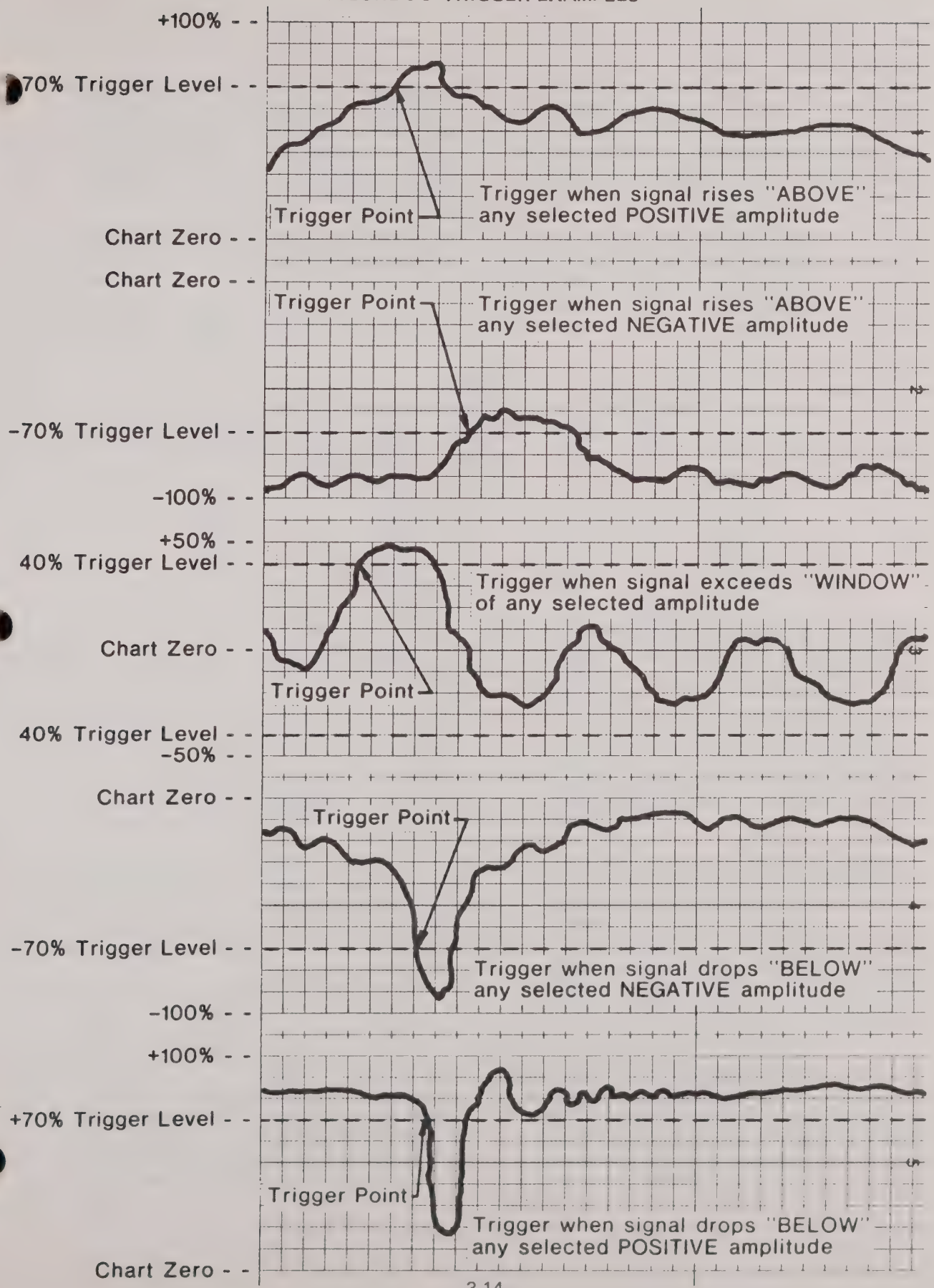

3. Measure the distance from the beginning of the plotted waveform to the trigger point (pulse on the Event Marker channel). Pulse should be within 1% of distance stated in Table 3-7. Repeat steps 2 and 3 for 25%, 50%, 75%, and 100% PRETRIGGER settings.

4. Repeat steps 1 thru 3 for memory sizes 4K and 8K. These are switch selectable on the rear panel.

5. Return the memory size switch to the 2K position and reselect "0%".

TABLE 3-7

Range % PRETRIGGER	Distance/Memory Size		
	2K	4K	8K
0%	0mm	0mm	0mm
25%	128mm	256mm	512mm
50%	256mm	512mm	1024mm
75%	384mm	768mm	1536mm
100%	512mm	1024mm	2048mm

3.5.7 AC Coupling for Trigger Source Operation

Select .5 V.F.S., X100, DC, AMP on channel 1. Select ABOVE, DC, MAN, on TRIGGER controls.

1. Apply a 50 Hz, 5.0 V p-p signal offset by -5.0 VDC to the input of channel 1.

2. Adjust the TRIGGER LEVEL control over its entire range. The TRIGGERED LED should come on in the range specified in Table 3-8.

3. Repeat step 2 for the different settings of the ABOVE/WINDOW/BELOW and AC/DC switches in Table 3-8. Note that the AC position effectively removes the DC offset from the trigger signal.

3.5.8 Error Lights Operation

1. With the TRIGGER LEVEL set at >+70% in the ABOVE mode, arm the unit.

2. Change the position of the % PRETRIGGER switch. When you select a different range, after the unit is armed, the error LED above the switch will light and the unit will disarm itself. Check to see that this happens.

3. Rearm the unit on several different ranges and repeat steps 1 and 2.

4. Repeat steps 1, 2, and 3 using the TIMEBASE switch in place of the % PRETRIGGER switch.

3.5.9 External Analog Trigger Operation

1. Select 5.0 V.F.S., X1 on channel 1. Apply a 50 Hz 5 V p-p AC signal to channel 1 (no offset).

2. Select ABOVE, EXTERNAL ANALOG TRIGGER and DC TRIGGER COUPLING. Apply a +45 VDC ±5 mV signal to the external analog trigger input on the rear panel.

   Reduce the level control from +100 until the triggered LED comes on. The display should read between +88 and +92%. (With external analog trigger, +100% is +50 V and -100% is -50 V.)

3. Select AC TRIGGER COUPLING. Adjust the level control until the TRIGGERED LED comes on. The display should read between -1% and +1%.

4. Set the LEVEL control to >+97%. Select DC TRIGGER COUPLING. Press ARM, and reduce TRIGGER LEVEL to generate a trigger. The recorder should plot a full scale sine wave.

5. Apply a 10 V p-p 50 KHz sine wave to the external analog trigger input on the rear panel. Select WINDOW, and adjust the LEVEL control until the TRIGGERED LED comes on. It should stay from -10% ±2 digits to +10% ±2 digits.

TABLE 3-8

TRIGGER AC/DC	ABOVE/WINDOW/BELOW	TRIGGERED LED - ON
DC	ABOVE	-5% to -100% ±1 digit
AC	ABOVE	+5% to -100% ±1 digit
DC	WINDOW*	+15% to -15% ±1 digit
AC	WINDOW*	+5% to -5% ±1 digit
DC	BELOW	-15% to +100% ±1 digit
AC	BELOW	-5% to +100% ±1 digit

*Note that polarity doesn't matter in the WINDOW mode - results would be the same whether + or - setting were used.

3.5.10 Pretrigger Memory Fill

1. Select 75% PRETRIGGER INTERNAL DC (TRIGGER), 50 HZ TIMEBASE. Apply a 50 Hz, 5 V p-p sine wave to the analog input channels. Adjust the LEVEL control until the TRIGGERED LED comes on.

2. On channels 1, 3, 5, 7 set the real time enable switches to ON, set 2, 4, 6, 8 to the OFF position. When the recorder is armed a 50 Hz sine wave should appear on channels 1, 3, 5, and 7 only.

3. Press ARM and watch the RECORDING LED. The ARM LED should stay on about 3 seconds before it goes OFF and the RECORDING LED comes on. The RECORDING light should stay on for about a second. Return all real time enable switches to the OFF position.

3.5.11 Trigger Level Accuracy

1. Turn the TRIGGER LEVEL fully CW. The display should read "+100%".

2. Turn the TRIGGER LEVEL fully CCW. The display should read "-100%".

3. On channel 1 select 5.0 V.F.S., X1, DC.

4. Select ABOVE.

5. Connect a DC voltage calibrator to channel 1.

6. Set the DC voltage calibrator to the various settings given in Table 3-9. Adjust the trigger level control until the TRIGGERED LED comes on. At that point, note the reading of the display and see that it falls within the specified limits. Remove the DC voltage calibrator from channel 1.

TABLE 3-9 TRIGGER LEVEL ACCURACY

INPUT VOLTAGE	DISPLAY READING
+4.5 ±4 mV	+90% ±2 counts
4.0 ±4 mV	80% ±2 counts
3.0 ±3 mV	60% ±2 counts
2.0 ±2 mV	40% ±2 counts
1.0 ±1 mV	20% ±2 counts
0 ±1 mV	0% ±2 counts
-1.0 ±1 mV	-20% ±2 counts
2.0 ±2 mV	40% ±2 counts
3.0 ±3 mV	60% ±2 counts
4.0 ±4 mV	80% ±2 counts
4.5 ±4 mV	90% ±2 counts

3.5.12 Timebase Operation

1. The timebase selector gives the user 3 parameters at each setting of the selector (refer to Figure 3-4). These three parameters are as follows:

   A. Frequency in KHz from .05 KHz to 50 KHz (the highest frequency to be recorded).

   B. Milliseconds/CM - From .08 to 80 ms/cm. This parameter can be read and used directly when the recorder chart speed is run at 50 mm/sec.

   C. Time/Point - The time it takes to sample each point on a cycle of a waveform at the frequency set in "a" above. On all positions except the 50 KHz position the waveform recorder samples at a rate of 10 points/cycle. On the 50 KHz range, it samples at a rate of 6.6 points/cycle.

2. Storage Mode

Analog signals from DC to 50 KHz and transients as short as 10 μsec are sampled, stored in memory, and subsequently recorded. By sampling at a high rate (up to 1/3 MHz) and playing out the stored data at a fixed 200 sample/second rate while recording with a 2000S Series recorder, effective chart speed can be many times (up to 1,667) the actual chart speed. Also larger memories provide longer test times and wider bandwidths. In the example (refer to Figure 3-5), a 1K memory can store a 1 KHz signal with a record time of 100 ms. The larger 2K, 4K, and 8K memories allow longer record times for the same bandwidth or higher bandwidth for the same record time. Table 3-10 represents recording time (seconds) vs. memory size for 2K, 4K, and 8K memory sizes.

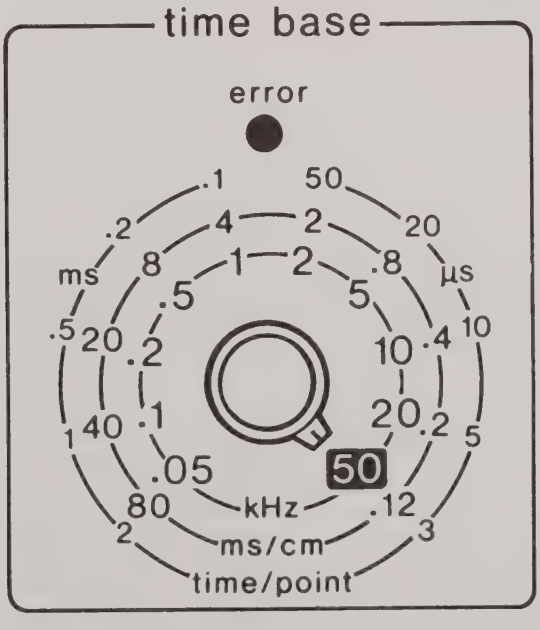

FIGURE 3-4 TIMEBASE SELECTOR

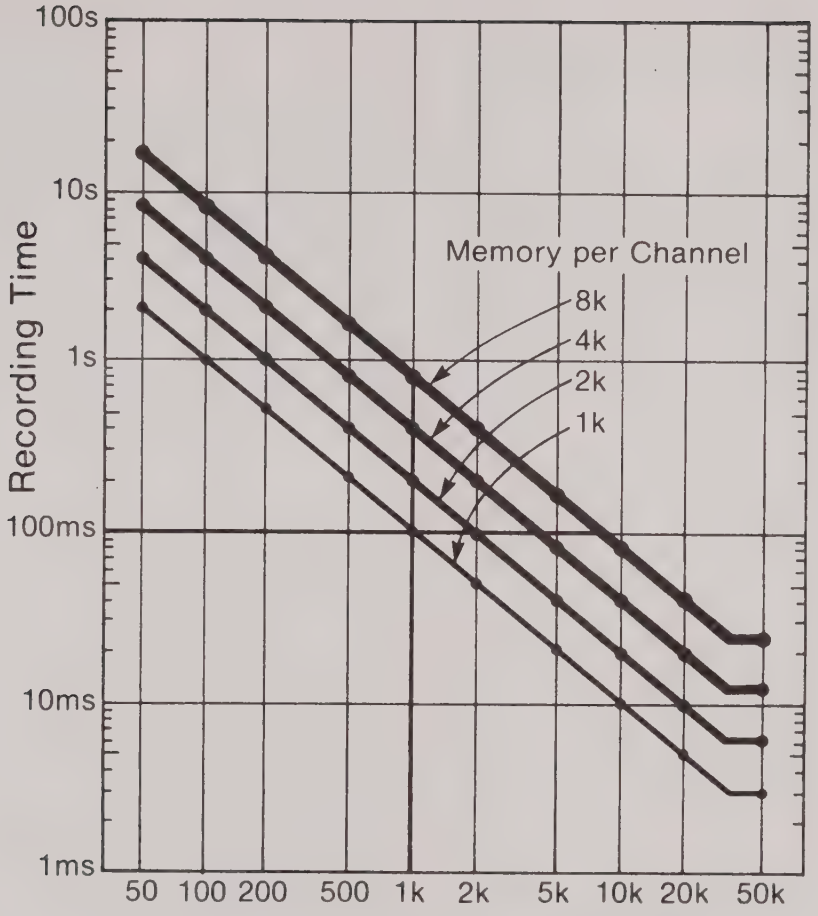

FIGURE 3-5 TIME BASE SETTING, HZ

TABLE 3-10 RECORDING TIME (SEC.) vs. MEMORY SIZE

TIMEBASE RANGE	RECORDING TIME vs. MEMORY SIZE			SAMPLE RATE
	2K	4K	8K	
50Hz	4.096 sec.	8.192 sec.	16.384 sec.	500
100Hz	2.048 sec.	4.096 sec.	8.192 sec.	1K
200Hz	1.024 sec.	2.048 sec.	4.096 sec.	2K
500Hz	.4096 sec.	.8192 sec.	1.638 sec.	5K
1KHz	.2048 sec.	.4096 sec.	.8192 sec.	10K
2KHz	.1024 sec.	.2048 sec.	.4096 sec.	20K
5KHz	.04096 sec.	.08192 sec.	.16384 sec.	50K
10KHz	.02048 sec.	.04096 sec.	.08192 sec.	100K
20KHz	.01024 sec.	.02048 sec.	.04096 sec.	200K
50KHz	.00614 sec.	.01228 sec.	.02457 sec.	333,333

NOTE: $\text{TIME} = \frac{\text{MEMORY SIZE}}{\text{SAMPLE RATE}}$

bi 2491

SECTION IV

THEORY OF OPERATION

4.1 INTRODUCTION

This multichannel amplifier/signal digitizer recorder is a device which will digitize a waveform, store it in memory and plot it out on an oscillograph at a frequency which the oscillograph can respond to. This recorder is capable of storing frequencies up to 50 KHz, at voltages up to 500 volts. The recorder can have 8, 6, or 4 channels, with each channel consisting of a preamplifier, anti-aliasing filter, sample/hold unit, analog/digital converter, memory, digital/analog converter, reconstruction filter and an output amplifier. All the channels share a common ground. The preamplifiers are single-ended floating amplifiers.

4.2 GENERAL

With the aid of the simplified block diagram (refer to Figure 4-1), a good understanding of the amplifier/signal digitizer can be obtained.

When an analog signal enters the recorder on the rear panel it travels to the preamplifier. The preamplifier scales the signal to the proper level for the analog to digital converter. Part of the preamplifier is an anti-aliasing filter which has a -3dB point at approximately 85 KHz. This filter is effective on the 50 KHz range. The purpose of this filter is to attenuate the frequencies in the input signal which would cause an alias signal to appear when plotting on the oscillograph.

After this filter the signal goes to the front panel amp/store switch, the sample/hold circuit, and the overvoltage detection circuit. Channel 1 preamplifier output also goes to the trigger circuit. The sample/hold circuit tracks the incoming signal while in the sample mode and stores it in the hold mode. This provides the A/D (Analog/Digital) converter with a stable DC voltage when it is performing a conversion. The signal is then applied to the A/D converter which converts the analog signal to a 8 bit digital number. This 8 bit digital number is then stored in the memory. When plotting occurs the data is read from the memory and is applied to the D/A (Digital to Analog) converter. This circuit converts the 8 bit digital number to an analog voltage at a rate of 200 points per second. The reconstruction filter follows the D/A and serves to smooth out the 200 Hz steps from the D/A signal before it is plotted on paper. The signal is then applied to the amp/store switch and to the output amplifier. The output amplifier has a gain of 1.6 which boosts the output signal to 5.0 volts. This 5.0 volts is applied to the oscillograph and results in a full scale movement of the pen.

When the recorder is armed the sequencer sets up various flip-flops and counters in the control section and starts the conversion and storing of the signal. All channels are operated in parallel. The sample/hold, A/D conversion and memory read/write operations are all done at the same time. The time base sets the sampling frequency and instructs the A/D converter to convert.

After the memory write process is completed the memory address is incremented. When the proper amount of memory has been filled up (determined by the front panel pre-trigger switch) a signal exits multiplexer U55 that enables the trigger to operate and trigger the recorder. When the recorder is triggered the pre-trigger counter starts counting at the same rate as the memory address counter. When the pre-trigger counter reaches the specified count (again determined by the front panel pre-trigger switch) to indicate the memory is full a signal is issued from multiplexer U56. This signal increments the sequencer to the next count to start the plotting.

When plotting occurs the pre-trigger counter is reset. The memory address counter was left at the last address of the last data byte plus one count. The plot signal from the sequencer starts a time delay circuit to allow the oscillograph chart to accelerate to speed. During this acceleration time the pens are held at the position set by the oscillograph's pen position. The two counters are now enabled to count. The data is read from the memory and applied to the D/A converter and on to the paper. The proper count of the pre-trigger counter is decoded to determine if the entire memory has been read. When all the memory has been read, the recorder stops and waits for either another arm command or a re-plot command.

When plotting the data on paper, the pre-trigger counter count is decoded to determine the point at which the trigger occurred. When this count is reached a signal is issued out of multiplexer U57 and closes the Event Marker on the oscillograph.

When the recorder is armed, the real time monitored can be enabled by selecting the desired channel. This allows data to pass from the A/D

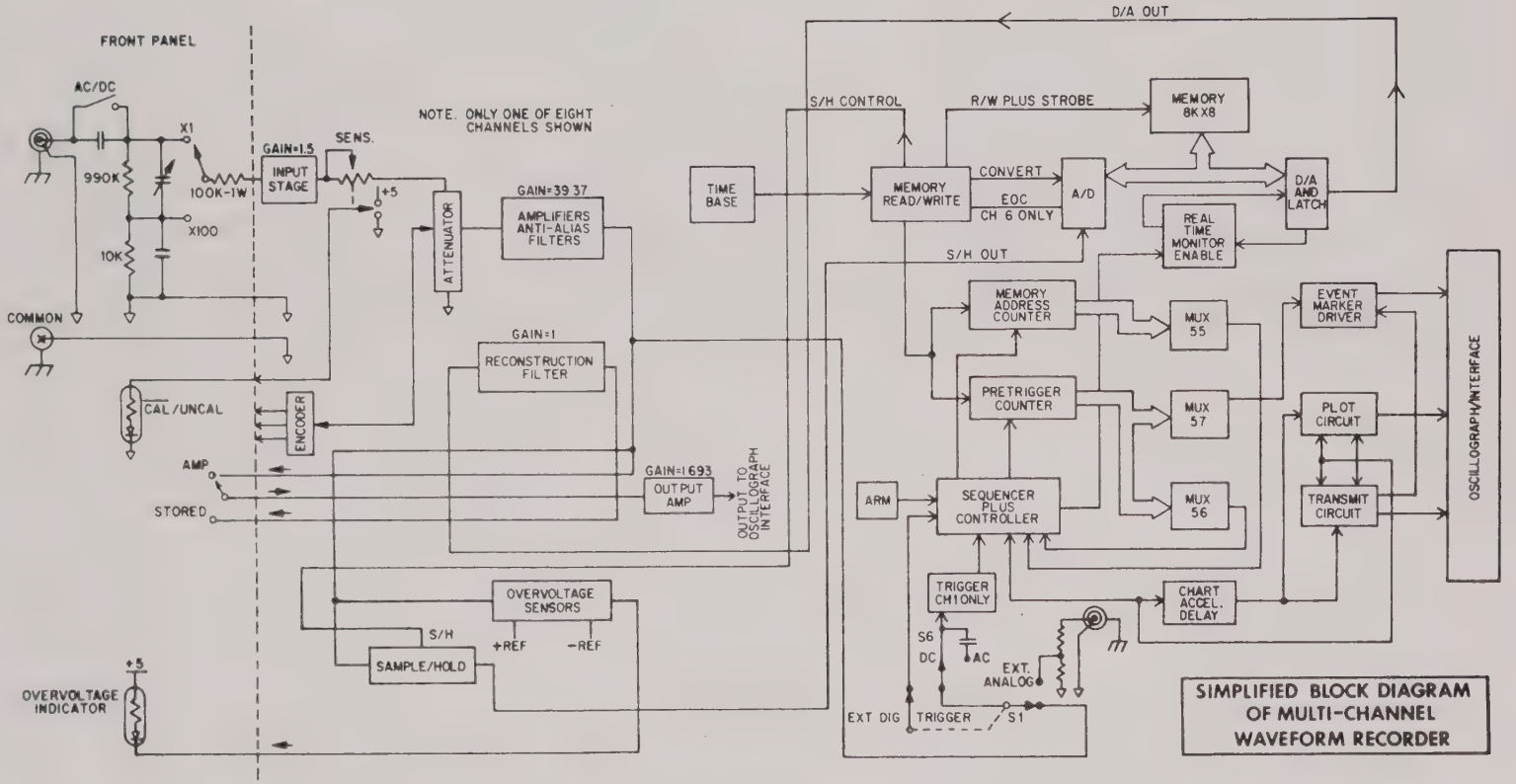

bi 2432

FIGURE 4-1 SIMPLIFIED BLOCK DIAGRAM

Converter to the D/A Converter and latch at a 30 Hz rate for real time viewing.

4.3 ANALOG BOARD (Refer to Schematic 296235)

The Analog Board consists of 8, 6, or 4 channels of signal conditioning which include amplification, scaling, anti-aliasing filtering, sample-hold, reconstruction filter, overvoltage detection, output amplifier, and switch position encoding. All of the analog channels are identical. Some circuitry such as the overvoltage detection reference voltage and input protection bias voltage are common to all channels. The external analog trigger scaling is also done on the analog board.

NOTE: If electronic components are referenced in this Theory of Operation as UX or RX, the "X" signifies the channel number. This number will be between 1 and 8.

4.3.1 Main Amplifier

The signal enters the recorder on the rear panel triaxial connector and travels to the front panel board through a low capacitance coax cable. The signal is routed through the x1/x100 attenuator and AC/DC coupling switch on the front panel and then to the analog board through JX1. Diodes DX1 and DX2 clamp the input voltage of UX1 to +7.5 or -7.5 volts. Amplifier UX1 has a gain of 1.5. Capacitor XC20 and RX01 form a high frequency compensation network to offset the effects of the capacitance in the cable carrying the signal from JX1. RX03 trims out the initial offset voltage of UX1. RX04 and RX05 set the gain to 1.5.

From UX1 the signal is routed through RX07, the sensitivity control to RX08, the full scale attenuator. RX08 is a precision ratio matched resistor network. The attenuator drives UX3 which has a gain of 9.84 and is trimmed by RX18. Its offset is trimmed by RX19. UX3 drives the two sections of UX4 which comprise a four pole anti-aliasing filter. This filter has a -3dB point at 85 KHz and a gain of four.

The output of the anti-aliasing filter UX4-7 goes to three places. First, to the front panel amp/store switch; second, the sample/hold circuit, and third, the overvoltage detector circuit, UX7. The output of UX4 at full scale will measure ±2.953 volts.

4.3.2 Sample/Hold Circuit

The S/H control is obtained by UX5, which is driven through slide switch S1, from a signal produced on the digital board. When the output of UX5 is high (approximately +9 volts), Diode DX3 is shut off, FET switch transistor QX3 is on and the output of UX6 follows and tracks the signal input at UX5. Any offset is trimmed by RX34. When the S/H control line from the digital board goes high the output of UX5 becomes negative (approximately -9 volts), the FET QX3 opens and the stored voltage on CX08 appears on the output of UX6.

This voltage goes to the digital board where it is converted to a digital number by the A/D converter. When the A/D conversion process is completed the S/H control signal at UX5 returns low and puts the sample/hold circuit back in the tracking mode.

4.3.3 Overvoltage Detection

The overvoltage detection circuit compares the incoming signal against a reference voltage to determine if it is approaching the limits of the A/D converter. The analog signal from the preamp enters UX7-5 and 9 and is compared against a 2.8 volt DC reference. If the signal exceeds 2.8 volts the comparator's output UX7-7 or UX7-12 goes low which triggers the one-shot (U1, 2, 8 or 9 depending on the channel). This causes the LED on the front panel to light for about 300 msec. If the overvoltage is a DC signal or a high repetition rate transient the LED will stay on.

The 2.8 volt reference for this circuit is derived from the +5 volt reference on the digital board. U4-1 changes the +5V to -2.8V and U4-7 changes it to +2.8V. These voltages form the 2.8 volt reference for the overvoltage detection circuits for all of the channels.

4.3.4 Reconstruction Filter

The two sections of UX8 form a four-pole low pass filter. This filter has a -3dB point at approximately 70 Hz. The input to this filter comes from the D/A converter on the digital board. The output goes to the amp/store switch on the front panel.

4.3.5 Output Stage

UX9 is the output driver which drives the pen recorder and other loads. It has a gain of 1.693 which is trimmed by RX31 to bring up the output voltage to 5.0 volts. It's offset is trimmed by RX32. The input to this circuit comes from the amp/store switch and is approximately 2.953 volts for a full scale signal.

4.3.6 Analog Range Encoding

The settings of the volts full scale and sensitivity switches are all encoded for use by the interface. UX2 is an octal encoder which outputs a code (UX2-6, 7, and 9) depending on which input pin (UX2-1, 2, 3, 4, 10, 11, 12, and 13) is tied low. This will encode the Volts Full Scale switch. This sensitivity switch is encoded by a +5 volt or ground level. These two signals go to tri-state buffers located on the interconnect boards. Refer to Table 4-1 for the Volts Full Scale Encoding.

4.3.7 External Analog Triggering

The voltage for the external analog trigger enters the board via a coax cable. It is divided by R3 and R4 to the proper level. C1 and C2 perform frequency compensation for the voltage divider.

TABLE 4-1
VOLTS FULL SCALE ENCODING

VFS	LINES 2	1	0
OFF	1	1	1
5.0	1	1	0
2.5	1	0	1
1.0	1	0	0
.5	0	1	1
.25	0	1	0
.1	0	0	1
.05	0	0	0

4.4 INTERCONNECT BOARD (Refer to Schematic 296234)

The Interconnect Board connects the analog, digital, interface, front panel and power supply boards all together. Power enters the board from the power supply on J6 and is distributed to all the boards from there. The connector is also the central point ground for the system. This board also contains the timebase and eight tri-state buffers for the front panel range data.

4.4.1 Timebase Selector

The Master Clock in the system is a 10 MHz clock oscillator, U7. This signal goes off the board along with U3-13 and U5-13 (called Loop 1A, 2A, 3A) and return on the lines called (Loop 1B, 2B, 3B). These signals are broken for purposes of automatic testing of this board at the factory. The 10 MHz signal is divided by two by U4-5 to 5 MHz and also by two more from U3-3 to 2.5 MHz. U3-7 divides the 5 MHz clock by 5 to get 1 MHz. U2 and U1-3 then divide the 1 MHz by three to get 333,333 Hz. The 1 MHz is further divided by five at U3-9 to get 200 Khz and then by ten at U3-13 to get 100 KHz. The 100 KHz is divided by two at U4-8 to get 50 KHz. The 100 KHz clock is divided by five at U5-7 to get 20 KHz and then divided by two more to get 10 KHz. U8-6 divides the 10 KHz by two to get 5 KHz. U5-9 divides the 10 KHz by five to get 2 KHz and then by two more at U5-13 to get 1 KHz. U8-8 divides the 1 KHz by two to get 500 Hz. All the frequencies between 333,333 Hz and 500 Hz are connected to multiplexer U10. The multiplexer selects the frequency to be used as the timebase clock and sends it out to the digital board. The 500 Hz clock in the time base if further divided at U6-7 to get 50 Hz and then by ten more at U6-9 to get 5 Hz. The 1 KHz clock is divided at U9-9 to get 200 Hz. These signals are used for timing control on the digital board.

4.4.2 Interface Channel Select

U11 thru U18 are tri-state buffers that buffer signals from the analog and front panel boards. These signals are the switch settings of the encoded Volts Full Scale switch, x1, x100 and Cal/Uncal switches. The channel desired is selected by the octal decoder U19. This decoder gets the desired address of the channel from the interface, decodes it and turns on the appropriate channel's tri-state buffer putting that channel's switch settings on the bus. This information on the bus is also applied to the interface.

4.5 FRONT PANEL BOARD (Refer to Schematic 296233)

The Front Panel Board houses the input circuitry for the analog and trigger section, the digital panel meter for the trigger, the pre-trigger and timebase encoding circuits and the arming encoder.

4.5.1 Trigger Circuit

The Trigger Circuit reference is taken from the digital board +5 volt reference. This voltage is set to -2.93 volts at U2-1 and +2.93 volts at U2-7.

These voltages are the references used for the trigger level potentiometer R19. U2-8 is a buffer amplifier and U2-14 is an inverting buffer amplifier. R18 serves as an offset control for U2-14. U1 is a dual comparator which compares the incoming signal from the preamps and the reference level set by the trigger level potentiometer R19. The comparator's outputs are decoded by U9-3, 6 and 8. Switch S5 selects the proper output of U9 and sends it to the digital board to trigger the recorder.

4.5.2 Arm Switch (S3)

U7 encodes the setting of switch S3. In the auto position U7-9 and 13 are high. In the off position U7-7, 9 and 13 are all low. In the manual position U7-7 and 9 are high. When the momentary switch S4 is depressed U7-4 becomes high and then returns low when S4 is released. This pulse is the arm pulse and goes to U21-5 on the digital board.

4.5.3 Pre-Trigger Switch (S9)

The Pre-Trigger Switch S9 has five ranges which are encoded by U8. This encoder goes into a full adder, U6, which adds together the encoded pre-trigger range and the encoded memory size data derived from S2 and U9 on the digital board. The output of the adder puts out a number which is a combination of the memory size and pre-trigger setting. The adder output goes to U12 which is a latch.

When the sequencer on the digital board, U14, is reset to (000), U13-12 (on digital board) is high. This allows data to pass through the latch U12. When the sequencer starts counting U13-12 on the digital board goes low and latches the data in U12 on the front panel board and clocks U10-6 and 8 high turning off the Error LEDs. The latched data at U12-12, 15, 16 and 19 goes into a magnitude comparator, U4, along with the unlatched data from U6. If the front panel pre-trigger switch does not change during the store or plot cycle the output of the comparator U4 remains high. If the switch changes, the latched number at U12 and the unlatched number at U6 are different. The comparator output U4-6 goes low and causes U10-8 to go low which turns on the pre-trigger error LED. The latched four bit number out of U12 goes to the digital board to disarm the recorder if it is storing data.

4.5.4 Timebase Switch (S10)

The process just described for the Pre-Trigger Switch, applies to the Timebase Switch. The timebase range is encoded by S10 (a BCD switch). U12-2, 5, 6 and 9 latch the switch setting at the same time the Pre-Trigger Switch setting is latched. U13 is also a four-bit magnitude comparator which compares the latched encoded time and the real time encoded timebase range data. If the timebase range is changed, U13-6 goes low and sets U10-6 low, turning on the Error LED. U13-6 also goes to the digital board to disarm the recorder if it is recording data.

4.5.5 Trigger LED (D7)

U5 is a one-shot which gets its trigger signal from the digital board. Any trigger pulses which will cause the recorder to trigger will cause U5 to trigger also. If the trigger signal is a DC level instead of pulses, U11-1 will stay low keeping the LED on because its input, U11-3 is high.

4.5.6 Trigger Level Indicator (DS1, DS2, DS3)

The Trigger Level Indicator is a 3-1/2 digit digital panel meter with the least significant digit cut off. It gets a voltage level proportional to the trigger level from TP-4. R28 is used to adjust the full scale value to 100, for an input of 2.93 volts.

4.6 DIGITAL BOARD (Refer to Schematic 296236)

4.6.1 Arming Circuit

The storage process starts when the recorder is armed. If the front panel switch is in the manual arm position, the front panel circuitry sets a high on U45-9. This allows the manual arm pulse which comes from the front panel through U21-5, and 6 to pass through U45-10, 11, U27-9, 8 and clock flip-flop U26-4. If the front panel switch is in the auto arm position it sets a high on U45-8 and allows the 500 Hz pulses on U45-7 to pass through to clock U26-4 instead of the manual arm pulse. If the front panel arm switch is in the off position

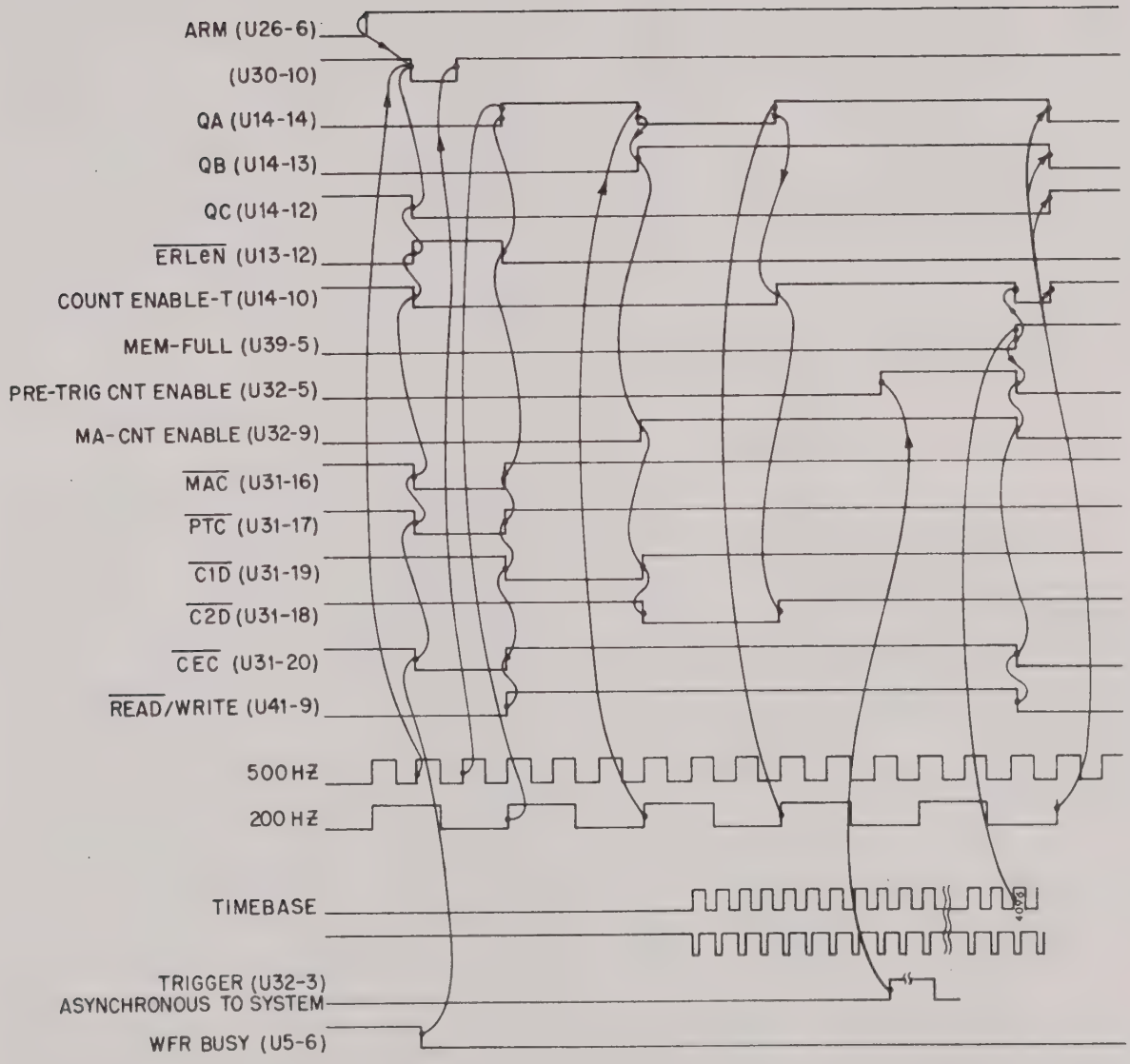

FIGURE 4-2 ARM AND STORE CYCLE

U27-1, 3 will go low and the J input of J-K flip-flop U26-2 is low. A low at this input will prevent the flip-flop from setting should a pulse appear at its clock input. This off signal also goes to U16-13 and causes U17-13 to go high. This goes through U13-3 and 6 to reset U14. It also passes through U27-6 to reset the arm flip-flop U26-6. If the recorder is armed and either the timebase or pre-trigger switches on the front panel are changed, the recorder will disarm itself. This is accomplished by the PT Arm Disable and the TB Arm Disable signals from the front panel. They enter U16-1, 2, if either of them go low, U26-6 and U15 will be reset as described previously. If the recorder is in the plotting mode the read signal at U17-12 prevents the signal at U17-11 from passing through and resetting U14 and U26-6. (Refer to Figure 4-2).

4.6.2 Sequencer Operation

Counter U31 (a programmable array logic device, PAL) and U14 form a sequencer for initialization of the recorder. One of the functions of U31 is to decode the different counts of U14 and set various circuits. When the recorder is armed U26-6 is set as described previously. Its positive going edge fires the digital one-shot consisting of U18-9, U30-10 and U17-10. This produces a negative pulse at U14-1 which resets the sequencer counter. When U14 is at count (000) U31-16, 17, 20 and 21 are all set low. This resets the memory address counters U40, U53, U58, U59 and pre-trigger counters U60-U63. It also resets flip-flops U32-5 (pre-trigger count enable), U32-9 (memory address count enable), U41-9 (read/write), U39-5 (memory full) and U41-5 (trigger enable). It also enables one of the count enable inputs, U14-10 of the sequencer. The other count enable input was enabled by U26-6. This allows the next 200 Hz pulse appearing at U14-2 to increment the counter. The (001) count of U14 sets U31-19 low setting U29-9 into the write mode. Again, U14-10 is enabled and the next 200 Hz pulse sets U14 to count 010 which sets U32-9. U32-9 is the memory address count enable flip-flop which allows the memory address counters U40, U53, U58, U59 to count. Again, U14-10 is enabled so the next 200 Hz pulse sets U14 to (011).

4.6.3 Memory Write Circuitry

The sample rate time base signal enters the digital board from U10-10 on the interconnect board and sets U12-5 and U11-5. U12-5 is the sample-hold control flip-flop. When U12-5 is low the sample-hold circuit is tracking the analog signal. When U12-5 is in the high state the analog signal is held for the analog/digital converter. After the converter completes the conversion it issues an end of conversion (EOC) signal which passes through U42-9 and 10 and clocks U48-5. This generates a chip select signal for the memory chips MX00-MX03. The next 2.56 MHz clock sets U48-9. This is the memory write pulse. The second 2.5 MHz clock sets U39-9 which resets U48-5 and 9. It also clocks U39-3 setting U39-5 high if the last memory location has been filled up. When the recorder is in the write mode U47-1 is enabled and the 400 nsec write pulse generated by U48-9 appears at U47-3. The trailing edge of this pulse increments the memory address counters setting them up for the next write pulse.

4.6.4 Data Storing Sequence (Refer to Figure 4-3)

When the recorder is armed as described previously, the sequencer goes through its steps by setting up the various initialization flip-flops. Meanwhile, the sample rate timebase has been supplying convert commands to the A/D converter and the memory write circuitry is writing the data into memory location (0) of the RAM. On count number two of the sequencer, the memory address count enable (MA-CNT-EN) will set flip-flop U32-9. This signal goes to the count enable inputs of the memory address counters. Now the trailing edge of the memory write pulse can increment the memory address counter, which sets up the memory address for the next write operation. Now, everytime the sample rate timebase gives the A/D converter a convert command, the converter converts and stores the data into memory and increments the memory address counter.

The recorder is supplied with five pre-trigger ranges, 0%, 25%, 50%, 75% and 100%. (Refer to Figure 4-4). This function allows the user to see data before the trigger point. In order to make sure that the data before the trigger is valid, we must make sure that the proper amount of memory has been filled up with data, before we allow a trigger to occur. This is accomplished by U54, U55, U41-5. The amount of memory that needs to be filled up prior to the trigger is dependent on the memory size and pre-trigger range selection. For example: a 50% point on an 8K memory is 4K, but on a 2K memory it is only 1K.

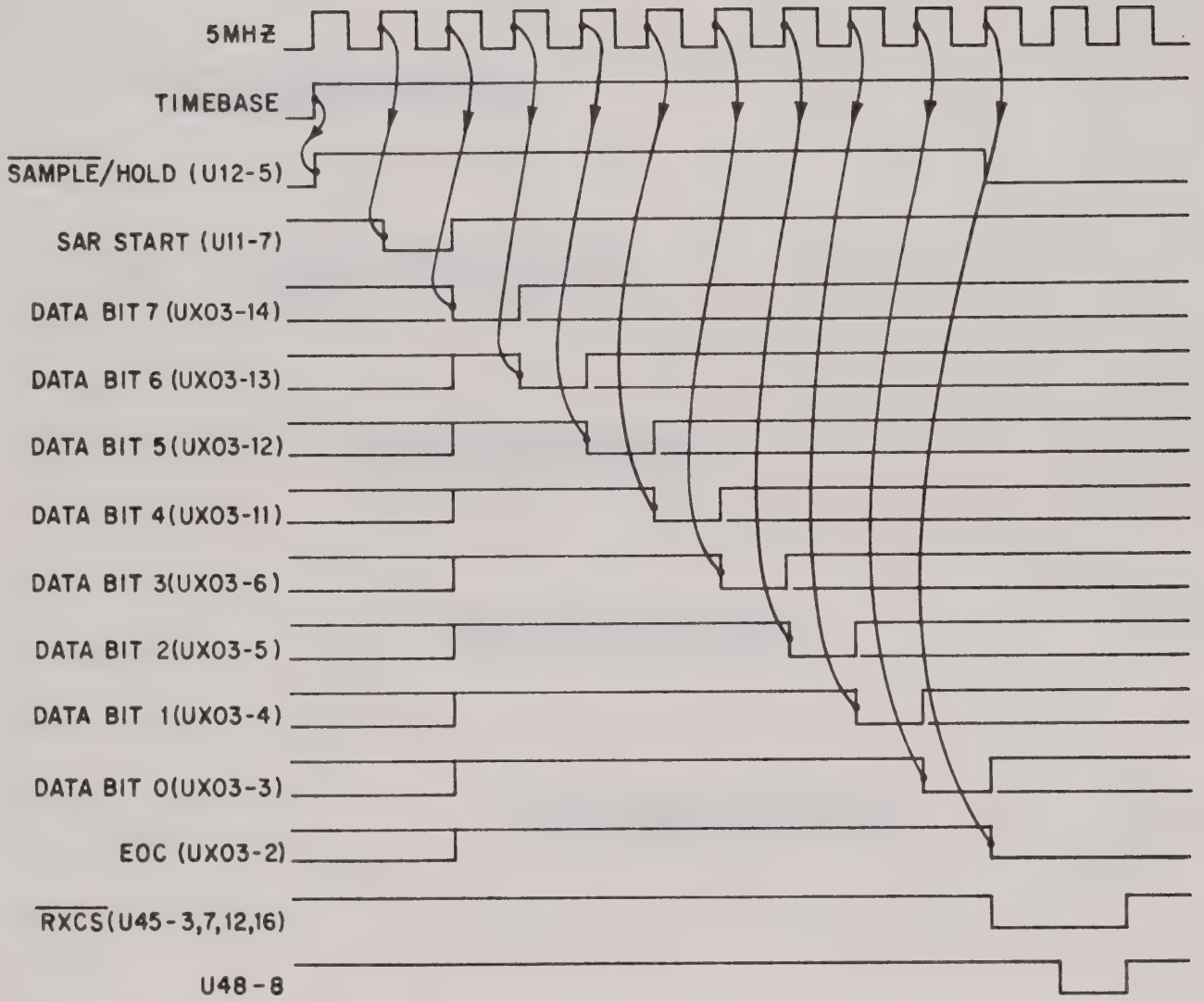

FIGURE 4-3 A/D CONVERSION AND DATA STORAGE CYCLE

bi 2434

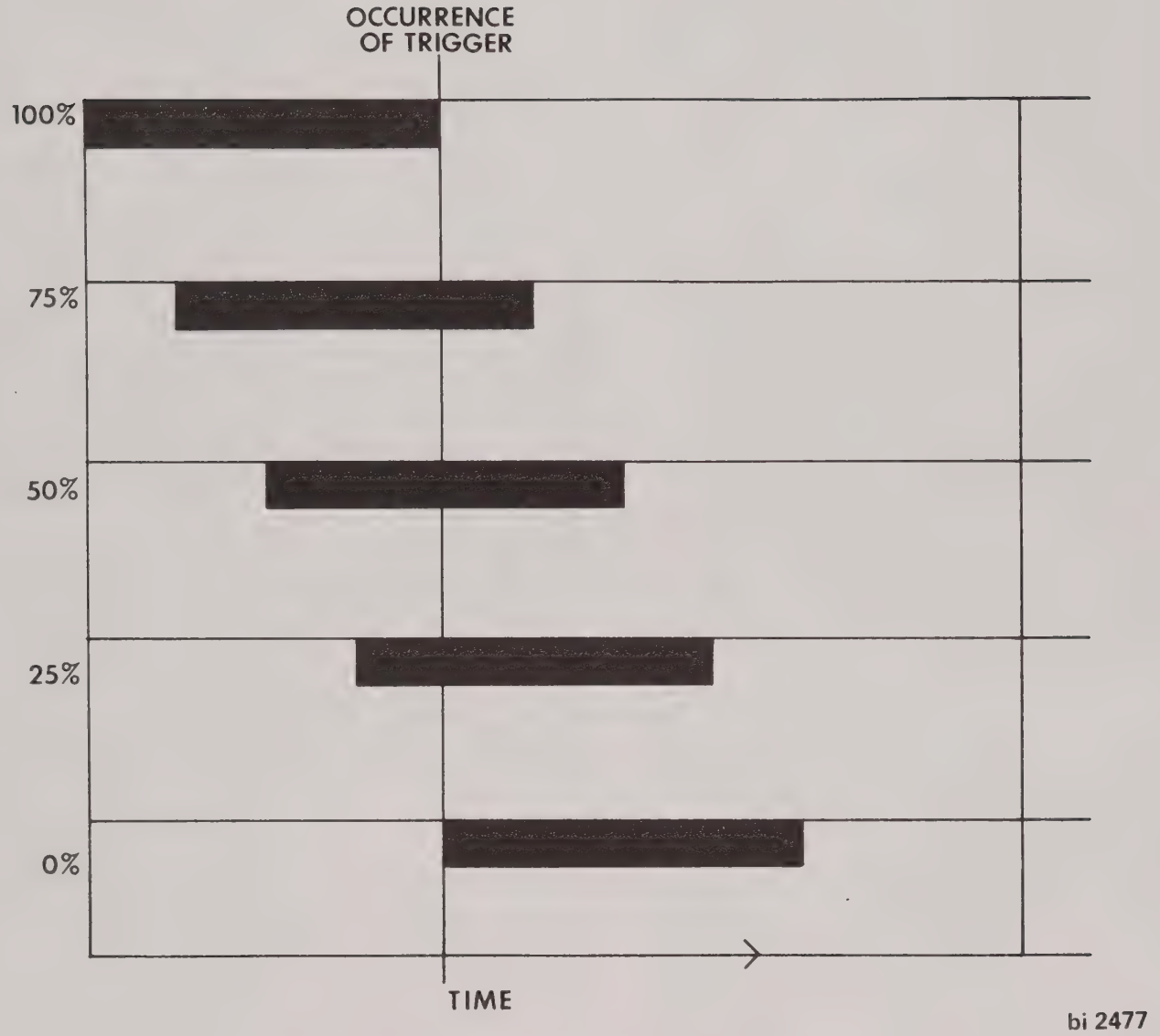

FIGURE 4-4 TIME RELATIONSHIPS OF TRIGGER DELAYS

So we must decode a different memory address for each memory size and pre-trigger setting. The memory addresses which correspond to the different memory sizes and pre-trigger settings are listed in Table 4-2. Multiplexer U55 has all these counts at its inputs. The proper count is selected by the multiplexer address. U54-3, 6 and 8 decode the addresses 1.5K, 3K, and 6K and feed them to the multiplexer U55. When the memory address counter reaches the particular count selected, flip-flop U41-5 is clocked high. This enables the trigger pulses at U16-11 to pass through U16-8 and clock U32-5 high. U32-5 is the pre-trigger count enable (PRETRIG-CNT-EN) flip-flop. This signal is connected to the count enable inputs of the pre-trigger counter consisting of U61-U63. This counter counts the number of data bytes written into memory after the trigger point. Now with this counter enabled both the memory address and pre-trigger counters will be incremented at the same time.

TABLE 4-2

MEMORY FULL COUNT OF PRE-TRIGGER COUNTER VS. MEMORY SIZE (U56-10)

PRE-TRIGGER SWITCH SETTING	MEMORY SIZE 2K	4K	8K
100%	1	1	1
75%	512	1024	2048
50%	1024	2048	4096
25%	1536	3072	6144
0%	2048	4096	8192

Multiplexer U56 selects the number of counts after the trigger point, required to fill the remainder of the memory. When that number is reached, U56-10 will go low and pass through multiplexer U42-3, 4 which will cause the memory full flip-flop U39-5 to be set. U51-3, 6 and 8 decodes counts 6K, 3K and 1.5K.

When the recorder is armed and waiting for a trigger, the memory address counter may cycle through the entire address range many times before the recorder is triggered. With the different sizes of memory, permissible provisions must be made to reset the memory address counters at either 2K or 4K counts, so we do not write into memory outside of the allotted area. This is accomplished by U43 and U45. The 2K or 4K counts from the memory address counters are selected by U45-22 and pass through U50-8, 9 and trigger the digital one-shot consisting of U38-11, 13 and U43. This pulse resets the memory address counter. When the 8K memory size is selected the counter automatically returns to a count of zero.

4.6.5 Real Time Monitoring

When the recorder is armed, U3-7 goes low, enabling switch bank S5. If any switch is closed a low travels through U67 enabling UX06 to pass A/D converter data on to the D/A converter also for real time viewing of the data. Real time data is limited to about 30 Hz, because this data also passes through the reconstruction filter.

4.6.6 Plotting Mode

The data storing cycle is complete when the memory full flip-flop U39-5 gets set. This signal goes into the U31-1 and causes both outputs U31-20 and U31-21 to go low. U31-20 resets both the memory address (U32-9) and pre-trigger (U32-5) count enable flip-flops preventing the counters from counting any more. U31-20 also resets U41-9 the read/write flip-flop setting the recorder into the read mode. U31-21 goes low with the memory full signal and causes the count enable input of the sequencer U14 to be enabled. This allows the sequencer to be incremented on the next 200 Hz clock, this time to a count of 100. When this count is reached, U14-12 goes high, passes through U28-1, 2, U38-1, 2, U22-2, 3 and clocks U23-9 high. If the external plot holdoff is active, U22-1 is low preventing the plot signal from reaching U23-11. U22-2 remains high and when the external plot holdoff is released, U22-1 goes high allowing the plot signal to pass through to clock U23-9 high. When U23-9 goes high it clocks U23-5 and U46-5 high. U46-5 closes relay K3 which starts the chart drive motor on the 2000S series oscillo-

graphs. U23-5 enables counter U25 to count. The clock for U25 comes from U35-9 and switch S3. With S3 in the 300 ms position a 50 Hz clock is selected. On the count of one, U25-13 is high and goes into U31-6. This causes the pre-trigger counters U61-U63 to be reset. When the count of 15 is reached, U32-5, 9 are both set high enabling both the pre-trigger and memory address counters to count. On the count of 16, U9-5 is set high which resets counter U25, U23-5 and U24-6.

4.6.7 Chart Acceleration

During the time counter U25 was counting U47-6 (Chart Acceleration) was low. This caused the octal latch U67 to get reset which reset octal latch U106-806. The outputs of these latches go the the D/A converter. Between the MSB output of the latch and the MSB input of the D/A converter there is an inverter. This inverter gives the D/A converter a 10000000 instead of a 00000000 when latches U106 thru U806 are all reset. The D/A converter puts out zero volts during this time. With zero volts going into the oscillograph the pen sits at whatever point the pen position is set at.

4.6.8 Data Plotting

The memory address counter (U40, U53, U58, U59) and pre-trigger counter (U61-U63) were enabled when U32-5 and 9 were set on the 15 count of U25. This allows the 200 Hz plot clock which passes through multiplexers U35-3 and 4 and U42-9 and 11 to generate memory read pulses from U48 and then clock the two counters. The data is read from memory, latched into U106-U806 and then the counters are incremented to the next address. The digital to analog converter then converts the digital number into an analog voltage. This process continues until all the memory has been read. U34 decodes the position of the memory size switch S2 and selects the 2K, 4K or 8K count of the pre-trigger counter. This count passes through multiplexer U42-2 and 4 to set the memory full flip-flop U39-5. This signal then passes through U29-4 and 6 and clocks U37-11.

U37 and U30-2 and 7 form a two bit shift register. After U37-9 goes high the next 500 Hz clock appearing at U30-9 will clock U30-2 high then U30-7 high. U30-7 then resets U37-5 and 9 and now a low is shifted through U30-2 and 7. The low pulse which appears at U30-3 resets the circuitry used in the plot cycle bringing an end to the plot cycle.

4.6.9 Trigger Marker

The trigger point appears as a pulse on the event marker. When in the plot mode the D input of U46-12 is enabled by the plot singal at U23-9 so when a pulse comes from multiplexer U57, U46-9 gets set. This signal energized relay K1 to activate the event marker. Counter U10 is also enabled to count at a 50 Hz rate. When a count of four is reached U9-9 gets set, resetting counter U10 and U46-9. This also de-energizes relay K1 and releases the event marker.

When the plot cycle was started, U12-8 was set low. This prevents the memory full pulse from passing through U29-4 and 6 and setting U37-9. If the front panel pre-trigger switch is set to 100% the very last data byte in memory will be the trigger point. In this case we must keep the chart moving long enough for the event marker to display a pulse. After the pulse is finished, we can turn the plot circuitry off. U38-8 is set low until the end of the event marker cycle then set high. If a memory full signal had been present at U29-4 it could now pass through to clock U37-9.

4.7 INTERFACE OPERATIONS - TRANSMIT

Transmission of data to the Interface cannot occur if the interface is not installed. When the Interface is installed it pulls the INFENB (Interface Enabled) line low which enables U6-3, 5. If the transmit mode is selected U6-4 becomes high. When U22-3 goes high to clock the plot flip-flop U23-9, it also clocks U5-9 high. This then clocks the transmit flip-flop U24-9 high which turns on the Interface Busy LED on the front panel. U24-8 is the Interface control line. This line selects multiplexer inputs U35-2, 11. U35-2 selects RDATA pulses from the Interface to read the memory instead of the 200 Hz. plot clock used for plotting. U35-11 selects 500 Hz for counter U25. This speeds up the time previously needed to bring the oscillograph chart up to speed. Since the chart is not used in the transmission of data to the Interface this 300 ms chart acceleration is not needed. This signal also disables U49-1 and U52-1 which prevents the chart motor and event markers from working. U24-8 also clocks U24-6 low. U24-6 is the transmit signal for the interface. This starts the plot cycle as described earlier. When counter U25 has completed counting it sets U9-5 high. This causes the transmit flip-flop U24-6 to return to a high state. This low to high transition of U24-6 tells the Interface to start to

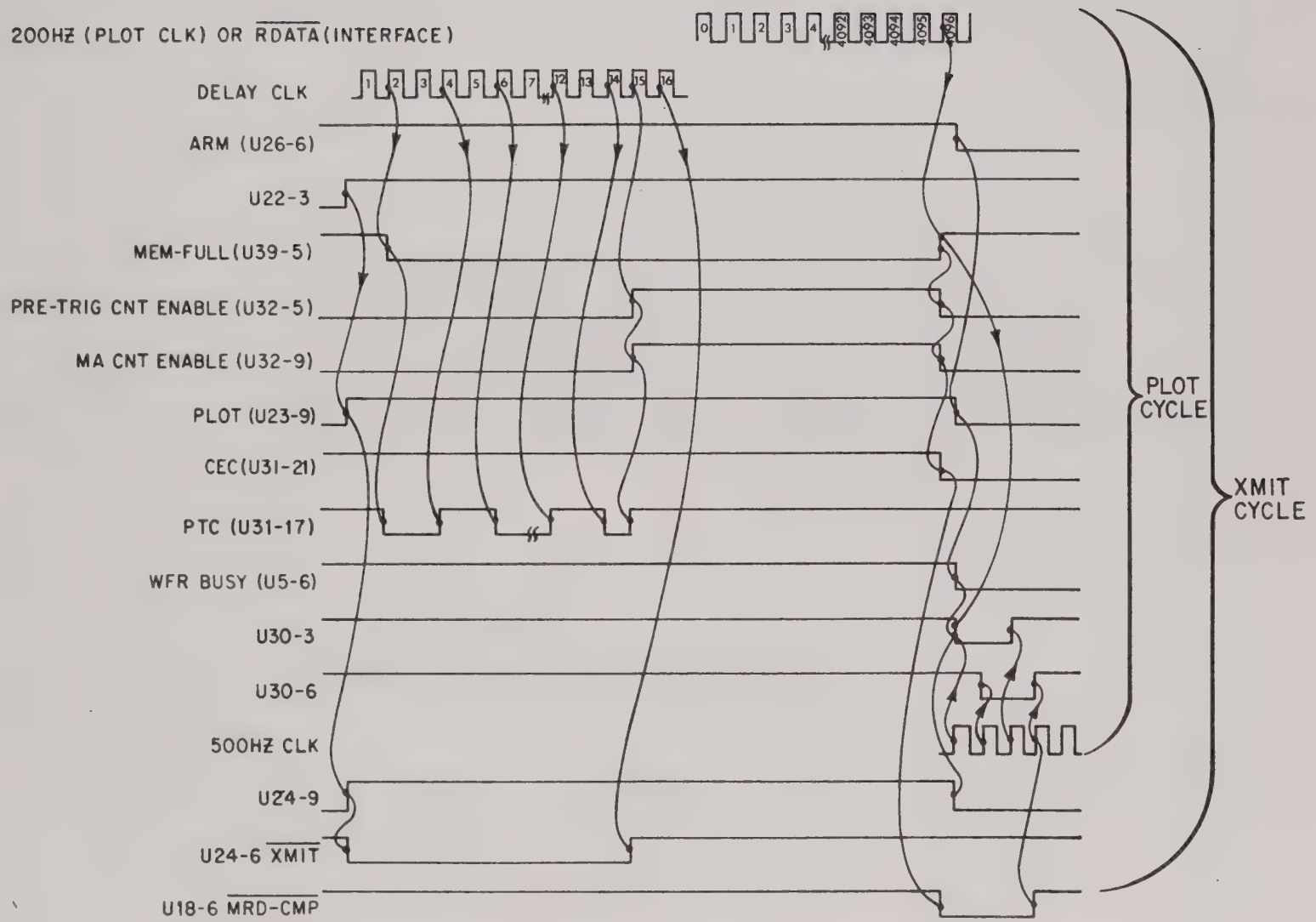

FIGURE 4-5 TRANSMIT AND PLOT CYCLE

bi 2435

request data. The Interface then sends RDATA pulses which sets U26-10 and causes data to be read from memory the same as the 200 Hz clock did on the plot cycle. The Interface uses CDSTRB at U36-3 to latch the data. (Refer to Figure 4-5)

This process of reading data continues until the memory has been completely read. When the memory has been read, the memory full pulse sets U18-6 low. This is the MRDCMP (Memory Read Complete) signal and it tells the Interface that the entire memory has been read. Again as in the plot cycle the circuitry is reset by the pulse from U30-3. As long as the INFBSY (Interface Busy) signal is low this reset pulse will be prevented from passing through U13-8 and resetting the arm flip-flop U26-6. This allows the Interface to issue a REXMIT (Re-transmit) signal and start another transmit cycle. The REXMIT signal passes through U21-8, 10, 11, 12 and directly sets U5-9 starting another transmit cycle. U8-1 will block any REXMIT signal if the recorder is not in the transmit or plot/transmit mode. If the Interface wants to terminate a transmission at any time it releases the INFBSY line and that sets U37-5 and causes U30-3 to issue another reset pulse. When the Interface is reading data it selects which channel it wants to read from by issuing a channel address which addresses the octal decoder U20. This selects and activates the tri-state latch U105-U805 for the particular channel selected. The data is then put on the 8 bit bus and goes to the Interface.

U5-6 is the WFRBSY signal. It is set low when the recorder is armed and reset with U30-3 after the plot cycle. It tells the Interface that the recorder is storing or plotting a signal. If the recorder is armed and then disarmed, the WFRBSY signal does not go inactive because the memory address counter has lost its starting position and the Interface will not get good data.

4.7.1 Plot-Transmit

When the front panel switch is set to Plot-Transmit, U6-1 is high. When the plot signal comes from U22-3 to clock the plot flip-flop U23-9 it also clocks U7-5 high. The normal plot cycle now takes place. At the end of a plot cycle the reset pulse from U30-3 goes around and resets various circuits, however, this pulse never reaches the arm flip-flop U26-6 because it was blocked at U13-11 with the signal from U7-5. After the pulse from U30-3 resets the circuits, U30-6 clocks U7-9 high. This signal clocks U24-9 high and the transmission cycle is complete. Both U7-5,9 get reset with the pulse from U30-3. Now the reset pulse from U30-3 can pass through U13-8 to reset the arm flip-flop U26-6.

4.7.2 Re-plot/Re-Transmit

After a plot or transmission cycle is complete, the arm flip-flop U26-6 is reset and the recorder waits for further instructions to either re-arm or re-plot/transmit. When a re-plot/transmit is required, a switch on the front panel shorts capacitor C2 which generates a pulse at U38-1 and starts another plot/transmit cycle.

4.8 ANALOG/DIGITAL CONVERTER

The A/D Converter used in this recorder is the successive approximation type converter. UX03 is an eight bit SAR (Successive Approximation Register). UX02 is an eight bit digital-to-analog converter. UX01 is a high speed comparator. The D/A converter is a current output DAC. Its current output is converted to a voltage by resistors RX08 and RX09. These resistors are precision non-inductive resistors. The amount of current the DAC puts out is determined by RX05. This resistor is selected to allow four milliamps of current to flow at the DAC output.

The analog-to-digital conversion process is started when the SAR (UX03-10) gets a convert pulse. This sets UX03-14 (the MSB) high. This puts a 10000000 into the D/A converter which puts out an analog voltage at half of its full scale range. The dynamic range of the DAC is +3 to -3 volts. The half voltage point is zero volts. The comparator decides if this voltage is greater or less than the incoming signal. If the incoming signal is larger than 0 volts, the comparator's output is low. If the incoming signal is less than 0, the comparator's output is high. The comparator's output is then latched into the SAR when the next 5 MHz clock enters UX03-9. This clock also causes the next bit UX03-13 to be set high. The SAR's output is now either 11000000 or 01000000 depending on the value of the first bit. The DAC will now put out a voltage equal to one-half the previous voltage, either +1.5 or -1.5 volts. The comparator again makes a decision as to whether the DAC's output voltage is greater or less than the incoming signal voltage. This second bit is stored in the SAR as was the first bit. This process continues

until all the bits have been tested. At this point the next 5 MHz clock causes the SAR to issue and EOC (End of Conversion). The EOC is taken off of U603-2 and sent to U47-12, 13 to start the memory write cycle we discussed earlier.

When the recorder is storing data, U41-9 is high. This causes the tri-state buffer UX04 to become active and pass the A/D converter data onto the bus to the memory circuits. When the recorder is in the plotting mode, UX04 becomes inactive and the A/D converter output is disconnected from the bus.

4.8.1 Digital to Analog Converter

The Digital-to-Analog Converter, converts the digital data to an analog voltage after it is read from the memory and sends it to the reconstruction filter. UX07 is an eight bit D/A converter. RX02 sets the D/A output current to two milliamps. The digital number coming out of the memory is latched into latch MX06 with a pulse from the memory write circuit U48-8. This latched digital number causes the D/A converter to put out a current which is converted to a voltage by UX08, RX03 and RX04. The maximum output of the D/A converter circuit at UX08 is +3 to -3 volts.

4.9 POWER SUPPLIES (Refer to Schematic)

The Amplifier/Signal Digitizer utilizes three power supplies. These supplies are a +5 volt supply and a dual ±12 volt supply.

4.9.1 +5 Volt Supply

The secondary of transformer T1 is full wave rectified by CR1 thru CR3 and filtered by C1 and C2. IC U1 is a voltage regulated IC that senses the output voltage and changes the drive current to the series pass transistors to correct the output voltage. U1-6 supplies a 7 volt reference voltage which is divided by R8, R9, and R10. The power supply's output is applied to U1-4. The output voltage of the power supply and the reference voltage at U1-6 are compared and the output voltage at U1-10 is adjusted to compensate for any differences. U1-10 controls the base current to Q6 which supplies more or less drive to the series pass transistors Q4 and Q5. As the base current drive to Q4 and Q5 changes the output voltage changes.

4.9.2 +5 Volt Current Limiting

As the load current increases, the emitter voltage of Q6 also increases. This voltage is divided by R6 and R7 and applied to U1-2. If this voltage gets too high (indicating too much load current is being drawn) U1-2 will reduce the output at U1-10. This process forms an automatic current limiting circuit, which protects against an overload condition.

4.9.3 +5 Volt Supply Overvoltage Protection

The output voltage is sensed by CR5 and R13. Should the breakdown voltage of Zener diode CR5 be exceeded by the output voltage, then CR5 will begin to conduct current, causing a voltage drop across R13. When the voltage drop across R13 reaches a sufficient level, Q8 will conduct, turning on SCR1 which shorts out the power supply and blows the fuse.

4.9.4 -12 Volt Supply

The secondary of transformer T1 is full wave rectified by CR8 thru CR11 and filtered by C6 and C7. The -12 volt supply is regulated by U2. The reference voltage at U2-5 is approximately 7 volts. The output voltage is divided by R44, R46, R46 and applied to U2-4. The current output U2-10 is adjusted to compensate for any differences between the reference voltage and output voltage. U2-10 varies the amount of emitter current flowing through Q2 which varies the base drive of Q3 and the output voltage. R54 is the current sensing resistor. As the current output of the supply increases U2 pins 2 and 5 sense the voltage drop across R54. If it becomes too large the current output of U2-10 is reduced, thereby reducing the output current.

4.9.5 +12 Volt Supply

The +12 volt supply operates the same as the -12 volt supply except for the series pass transistor Q1 drive circuit. U3-11 controls the current through R31. This varies the collector current of Q1 and base current of Q7 which varies the output voltage. R34 is the current limiting resistor, as its voltage increases the current through R31 decreases which reduces the output voltage and current.

SECTION V

MAINTENANCE

5.1 INTRODUCTION

This section contains paragraphs describing preventive maintenance, calibration, troubleshooting, and subassembly replacement. Preventive maintenance consists of cleaning, lubrication, and periodic inspection.

5.2 SUBASSEMBLY REPLACEMENT

5.2.1 Analog Board (896235) Removal

WARNING: BEFORE ATTEMPTING TO REMOVE ANALOG BOARD TURN POWER OFF AND DISCONNECT RECORDER FROM POWER SOURCE.

1. Using a phillips screwdriver remove the 12 screws from the rear cover panel of the recorder as shown in Figure 5-1.
2. Slide top cover from the recorder to expose the Analog Board as shown in Figure 5-2.
3. Using an allen screwdriver, carefully remove the Volts Full Scale knobs from the front panel as shown in Figure 5-3.
4. Using a phillips screwdriver remove one screw on each side of the recorder as shown in Figure 5-3.
5. Carefully disconnect the connectors on the Analog Board from the Interconnect Board as shown in Figure 5-2.
6. Carefully remove the Analog Board from the recorder as shown in Figure 5-4.

5.2.2 Digital Board (896236) Removal

1. Repeat step 1 of Section 5.2.1 Analog Board removal.
2. Turn recorder over on its' reverse side and remove bottom cover panel as shown in Figure 5-5.
3. Carefully remove Digital Board from the recorder as shown in Figure 5-6.

5.2.3 RS232C (896237) Removal

1. Repeat step 1 of Section 5.2.1 Analog Board Removal.
2. Carefully remove the RS232C Board as shown in Figure 5-7.

5.2.4 Power Supply Removal

1. Repeat Section 5.2.2 Digital Board Removal steps 1, 2 and 3.
2. Disconnect P1 and P6 of the Power Supply (refer to Figure 5-8).
3. While holding the Power Supply, carefully remove the four phillips head screws located on the side and rear of the recorder (refer to Figures 5-9 and 5-10).

5.2.5 Sandwich Assembly Removal 896233 and 896234

1. Repeat Section 5.2.1.
2. Repeat Section 5.2.2.
3. Disconnect Power Supply cables P1 and P6 as shown in Figure 5-8.
4. Using a phillips screwdriver, carefully remote the six phillips head screws, located on each side of the recorder (refer to Figure 5-11).
5. Using a phillips screwdriver remove the six screws holding the Front Cover Plate of the Sandwich Assembly and remove Sandwich Assembly as shown in Figure 5-12.

5.3 CALIBRATION

a. General

The Gould Multi-Channel Amplifier/Signal Digitizer has been accurately calibrated before shipment from the factory. Therefore, it should give long troublefree service. Should recalibration be required, it should be performed by qualified technical personnel only.

CAUTION: CALIBRATION SHOULD NOT BE ATTEMPTED UNLESS SUITABLE, SPECIFIED TEST EQUIPMENT IS USED. ALWAYS CONNECT GROUND LEAD OF INPUT CABLE. WHEN TAKING READINGS USE GROUND FOR SPECIFIC CHANNEL BEING TESTED.

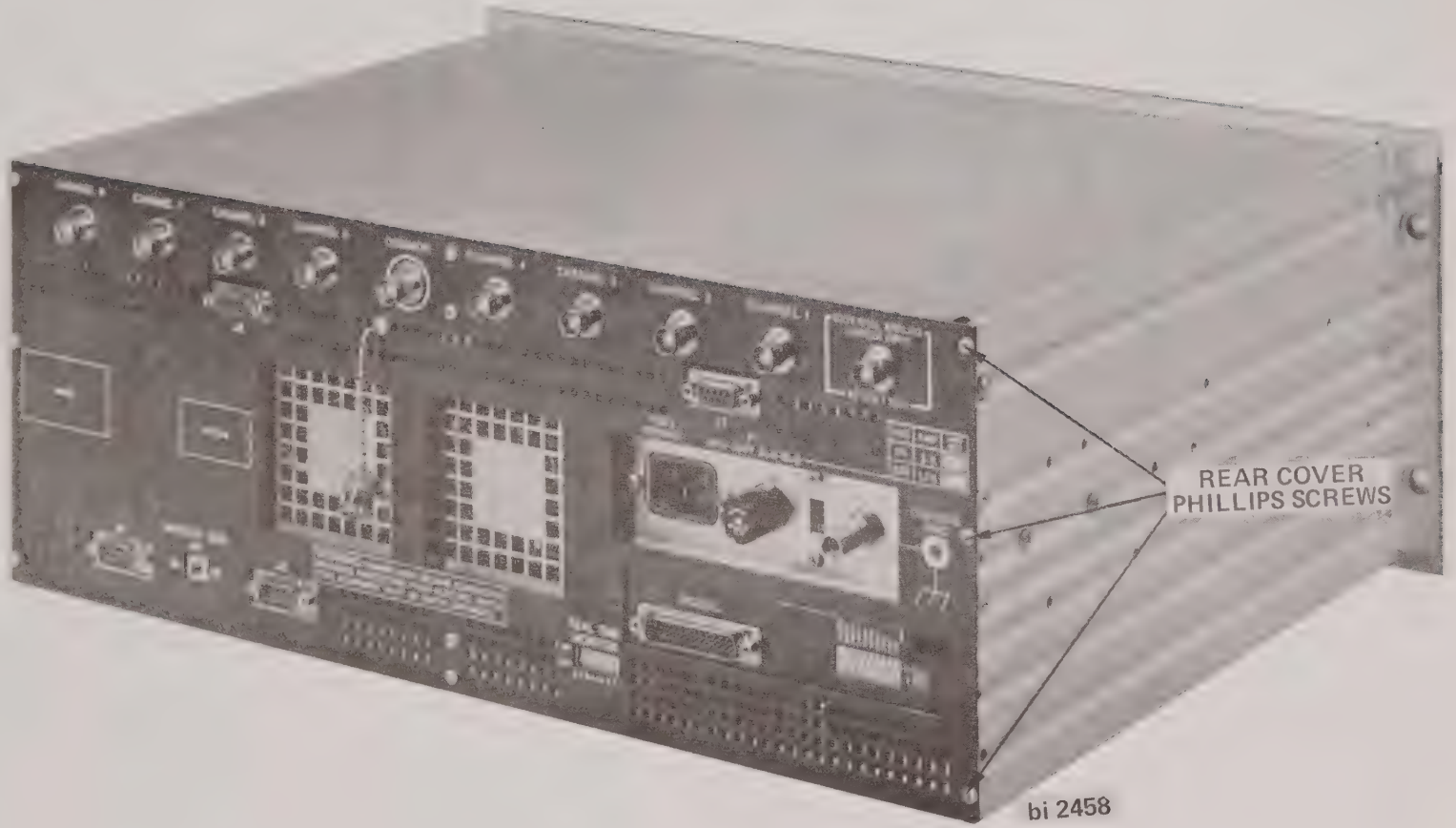

FIGURE 5-1 MULTICHANNEL REAR PANEL REMOVAL

NOTE: This procedure is broken down into sub-paragraphs by individual adjustments. Under normal conditions, complete calibration should be performed every six months.

b. Equipment Required

The following is a list of test equipment necessary for calibration.

1. AC/DC Sources Wavetek 178, Fluke 5200A or equivalent.
2. Multimeter - Fluke 8520 or equivalent.
3. Triplett 630NS.

NOTE: Prior to calibration unit should be allowed a one (1) hour warm-up time for stabilization.

5.3.1 Mechanical/Visual Check

1. Check assembly for tightness.
2. Check wiring, connections, solder joints, and lead dress.
3. Check front panel for scratches and blemishes.
4. Check silkscreen quality.
5. Check knobs for proper alignment and tightness. Knobs should be spaced approximately .030" off the panel.
6. Operate all front panel controls to assure free motion.

5.3.2 Calibration Procedure

a. Set Front Panel controls as follows:

Volts Full Scale . . . . . OFF
Plot/Plot-Trans/Transmit. . . . . Plot
Above/Window/Below. . . . . Above
Auto/Off/Manual . . . . . Manual
% Pretrigger. 0%
AC/DC Coupling (Trigger). . . . . DC
Int/Ext Dig/Ext Analog. . . . . Internal
Timebase. . . . . .05 KHz
X1/X100-Channel 1-8. . . . . X1
AC/DC-Channel 1-8. . . . . DC
Amp/Store-Channel 1-8. . . . . Amp
Sensitivity Controls. . . . . Fully CW
Trigger Level . . . . . +100%
AC Power . . . . . Plug waveform recorder into 115 VAC ±1 VAC line power.

Set Rear Panel controls as follows:

Power . . . . . 115 VAC
Memory Size. 2K
Real Time Enable . . . . . On
Chassis Gnd. Conn. . . . . Installed

Internal Controls on P.C. Boards:

Analog Board:

NORM/Gnd (S1). . . . . NORM
NORM

Digital Board:

300 ms/3 sec. . . . . 300 ms

NOTE: For 230 VAC operation the rear panel line select switch must be set for 230 VAC position and fuse (F1) changed from 2 1/2 amps to 1.25 amps. (Refer to Figure 2-1).

b. Analog Board Calibration (896235)

1. Remove rear panel cover and top cover as described in Section 5.2.1 steps 1 and 2.
2. Short the input connector for channel being calibrated. Attach the DVM (Lo) to channel 1 TP-17 and the DVM (Hi) to TP-13. Set the Volts Full Scale switch to the OFF position. Adjust R119 for 0 volts ±.3 mV at TP-13. Advance Volts Full Scale switch for channel being calibrated to 0.05 volts. Turn the sensitivity control fully clockwise. Adjust R103 for 0V ±0.3 mV at TP-13.
3. Move the DVM (Hi) to TP-16. Adjust R132 for 0V ±.3 mV.
4. Move the DVM (Hi) to TP-14. Move switch (S1) to ground. Adjust R134 for 0V ±2 mV.
5. Move the DVM (Hi) to TP-13. Set front panel X1/X100 switch to X1. Feed into input of BNC connector +50 mV DC ±0.01 mV. Adjust R118 for 2.953 volts ±1 mV.
6. Move the DVM (Hi) to TP-16. Adjust R131 to give 5V ±1 mV at TP-16.
7. Attach AC voltmeter between TP-17 (Lo) and TP-16 (Hi). Set X1/X100 switch to X100.

Feed into the input of the BNC connector a 50 Hz sinewave and adjust generator amplitude to give a reading at TP-16 of 3 volts RMS ±5 mV. Now switch the generator frequency to 50 KHz. Adjust compensating trimmer CX01 on front panel Vertical Board (refer to Figure 2-3) to give same reading (3 volts RMS) as that obtained when frequency was 50 Hz.

8. Repeat steps 2 thru 8 for all remaining channels. Channels 2 thru 8 will be TP-20, TP-30, R200, R300, etc. Return switch (S1) to the NORM position.

c. Digital Board Calibration (896236)

1. Rotate recorder vertically on its' side and remove bottom cover to expose the Digital Board.

2. Attach the "low" side of the DVM to TP-2 or TP-3, and the "high" side to TP-1. These test points are located in the upper right hand corner of the Digital Board. Adjust R1 (refer to Figure 2-2) so the voltage at TP-1 is 5.000 ± .0005 volts.

d. Front Panel Board Calibration (896233)

1. Set the Trigger Level control fully clockwise.

2. Attach the "low" side of a DVM to TP-3 and "hi" side to TP-5. These test points are located on the bottom left hand corner of the front panel board. Record this DC voltage.

3. Move the "hi" probe to TP-4. Adjust R18 until the DVM reads the same voltage as in step 2 but opposite in polarity. (Refer to Figure 2-3).

4. Turn Level control fully clockwise. Adjust R28 until the front panel display reads "+100%".

5. Turn Level control fully CCW. Make sure display reads "-100%". A small adjustment of R18 may be necessary to insure the level control reads +100% and -100%.

6. This completes the recorder calibration.

5.4 TROUBLESHOOTING

5.4.1 General

This section contains a troubleshooting table to assist operating or maintenance personnel in isolating malfunctions which may occur during normal operation of the Gould Multi-Channel Waveform Recorder.

Please refer also to Section IV, Theory of Operation, Section 5.2, Replacement of Assemblies, Section VI, Parts Identification and the schematics in the Appendix section.

For service beyond the scope of the instructions contained in the manual or the technical equipment available, contact your nearest Gould Service Engineer listed on the warranty sheet shipped with the recorder.

5.4.2 Troubleshooting Table

All malfunctions are listed in sequence. Be sure to check all steps in sequence to isolate a malfunction.

5.4.3 Troubleshooting Flow Chart

In order to facilitate troubleshooting of the recorder circuitry, a flow chart is included. Initially, this diagram can be used in conjunction with the Theory of Operation in Section IV of this manual. As service personnel gain familiarity and experience with the equipment, the need to refer to supporting descriptive text will gradually be eliminated.

The flow chart diagram provides the essential information required to isolate a fault to either the Front Panel Board, Digital Board, Analog Board, and Power supply.

TABLE 5-1 ELECTRICAL POWER MALFUNCTIONS

MALFUNCTION	CAUSE	REMEDY
1. Recorder inoperative (power lamp will not illuminate when power switch is depressed).	A. Unit not connected to power source.	A. Connect unit to applicable power source.
	B. Main circuit fuse blown (F1).	B. Replace circuit fuse (F1) after correcting malfunction.
	C. Power switch defective.	C. Replace power switch.

MULTI-CHANNEL TROUBLESHOOTING FLOW CHART

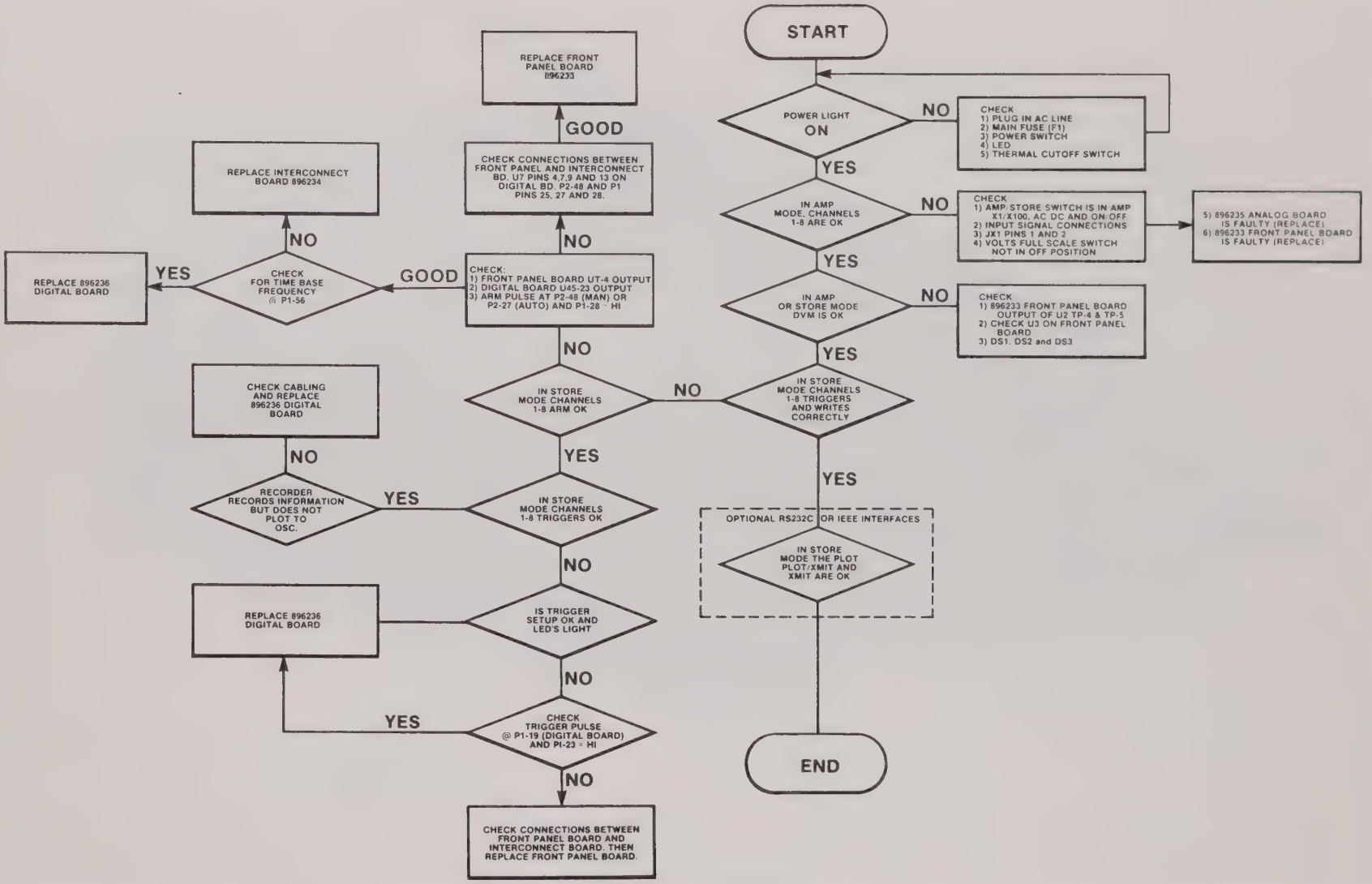

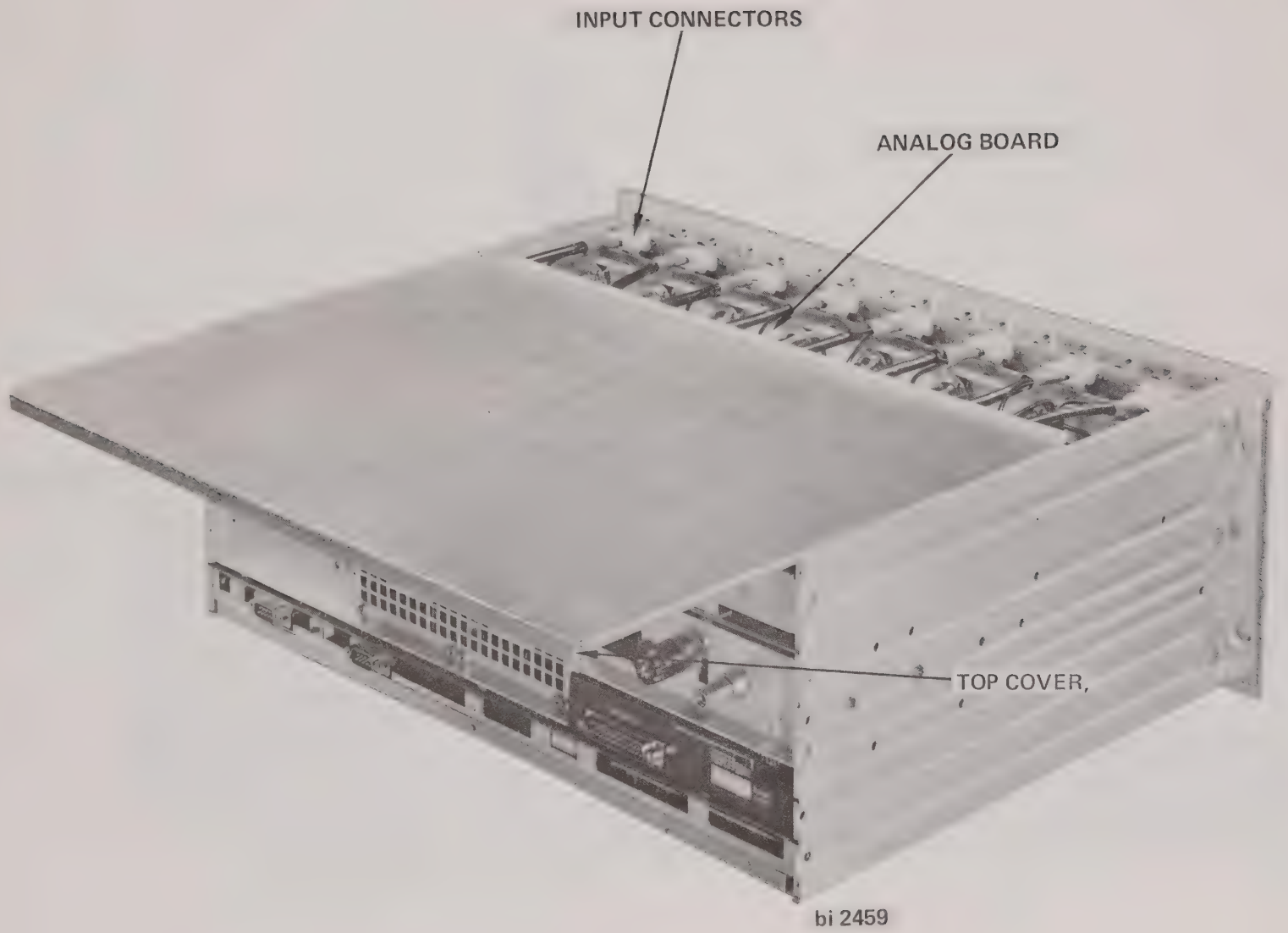

FIGURE 5-2 TOP COVER ANALOG BOARD REMOVAL

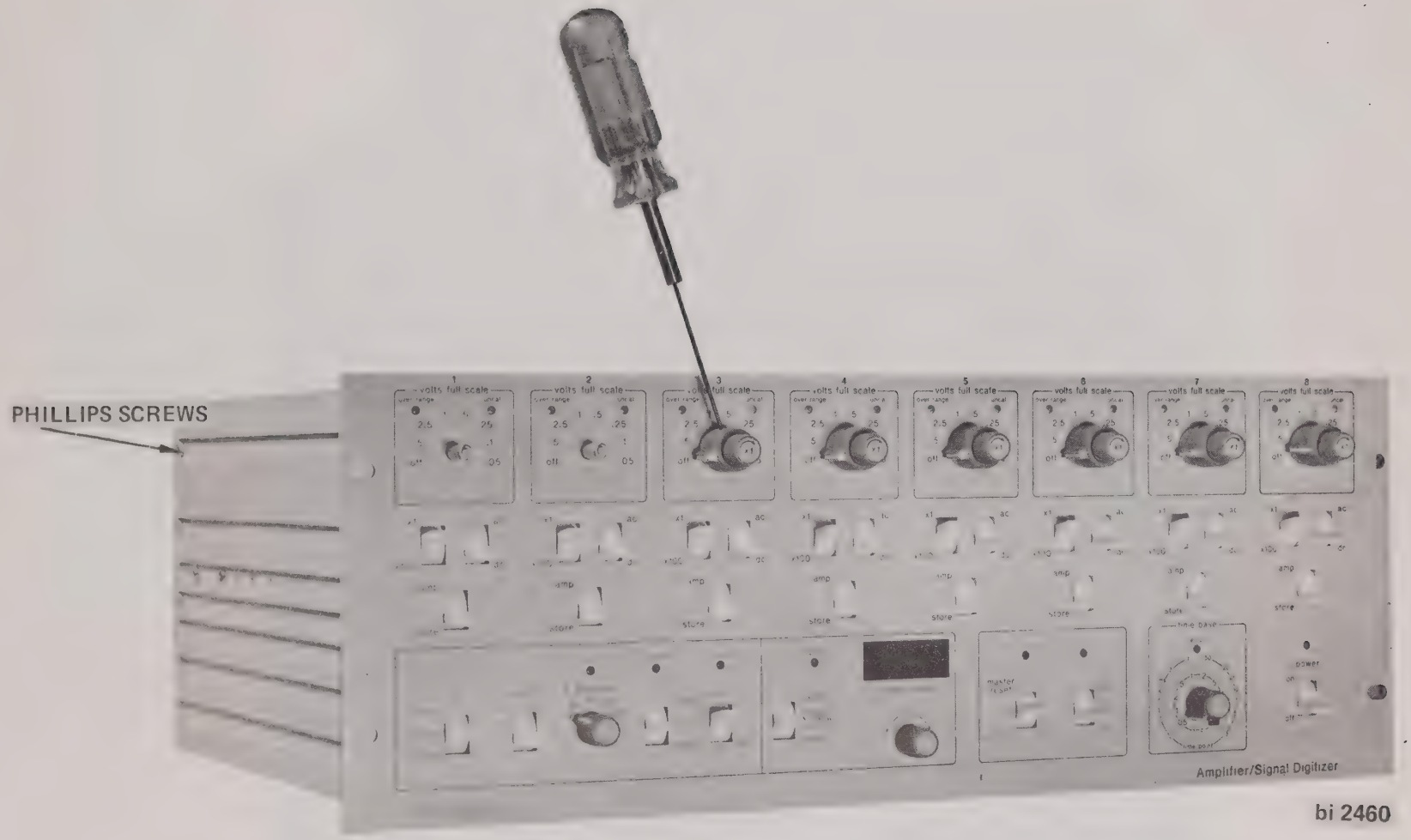

FIGURE 5-3 VOLTS FULL SCALE KNOB REMOVAL ANALOG BOARD

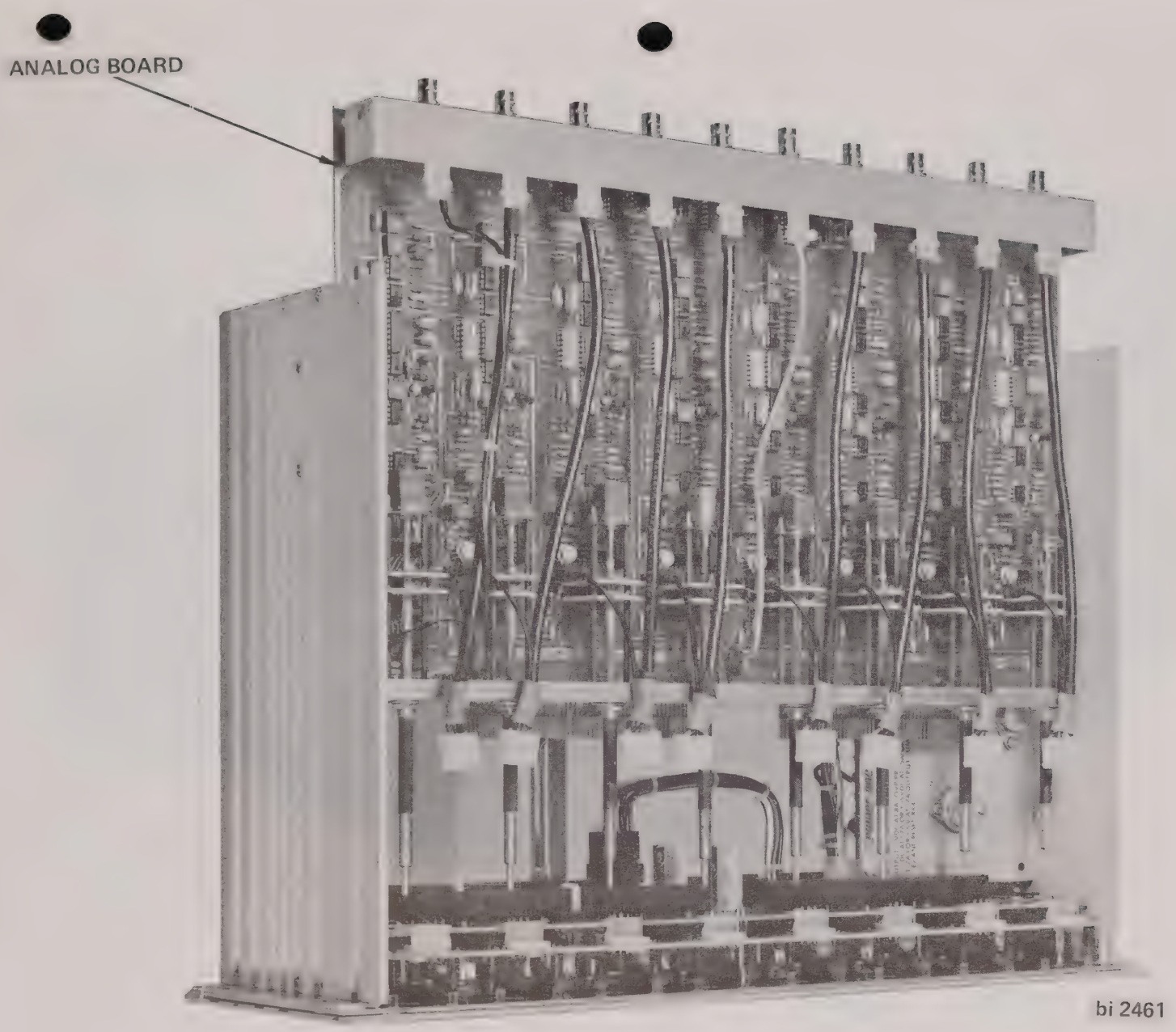

FIGURE 5-4 ANALOG BOARD REMOVAL

FIGURE 5-5 TOP COVER REMOVAL DIGITAL BOARD

FIGURE 5-6 DIGITAL BOARD REMOVAL

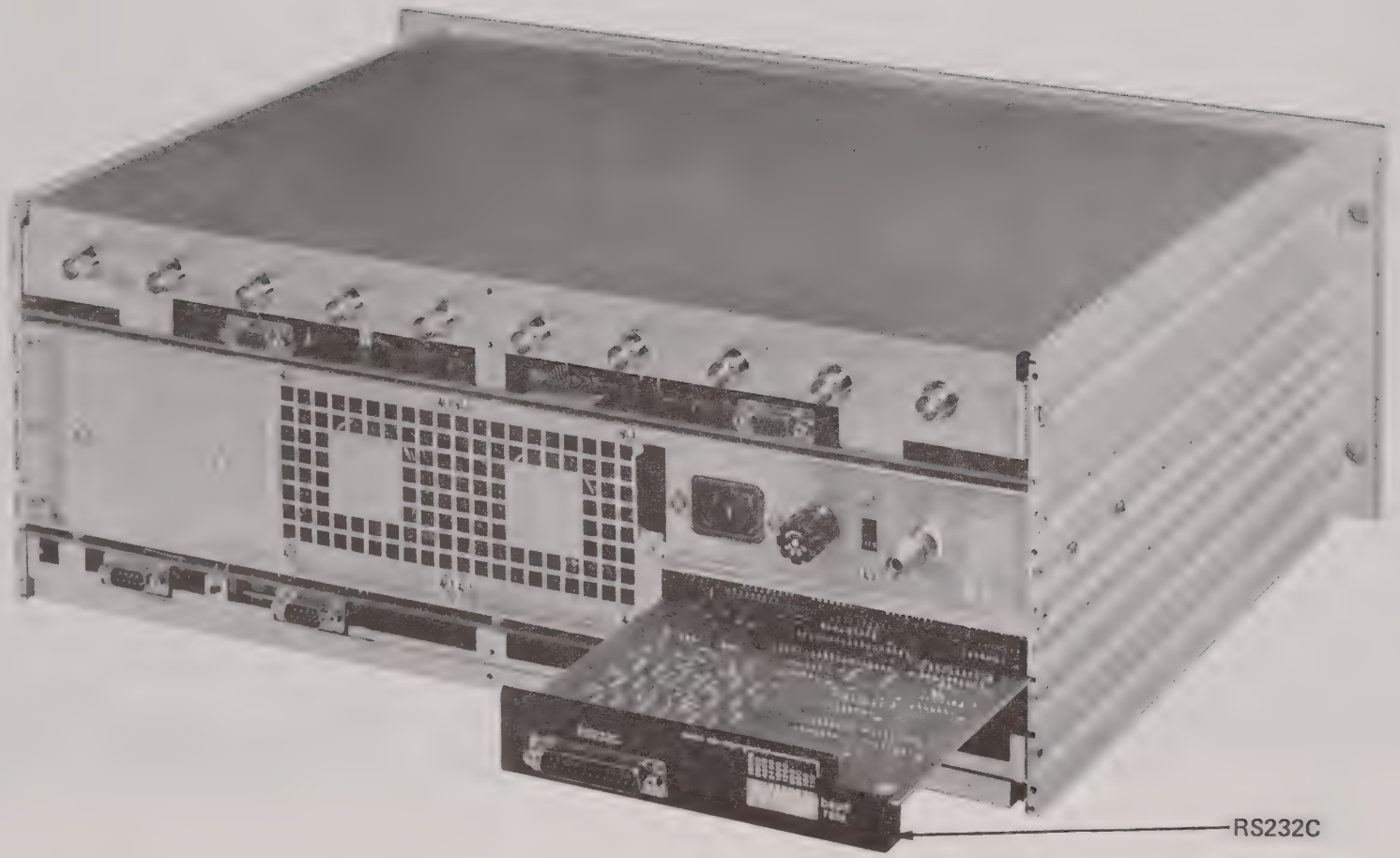

FIGURE 5-7 RS232C REMOVAL

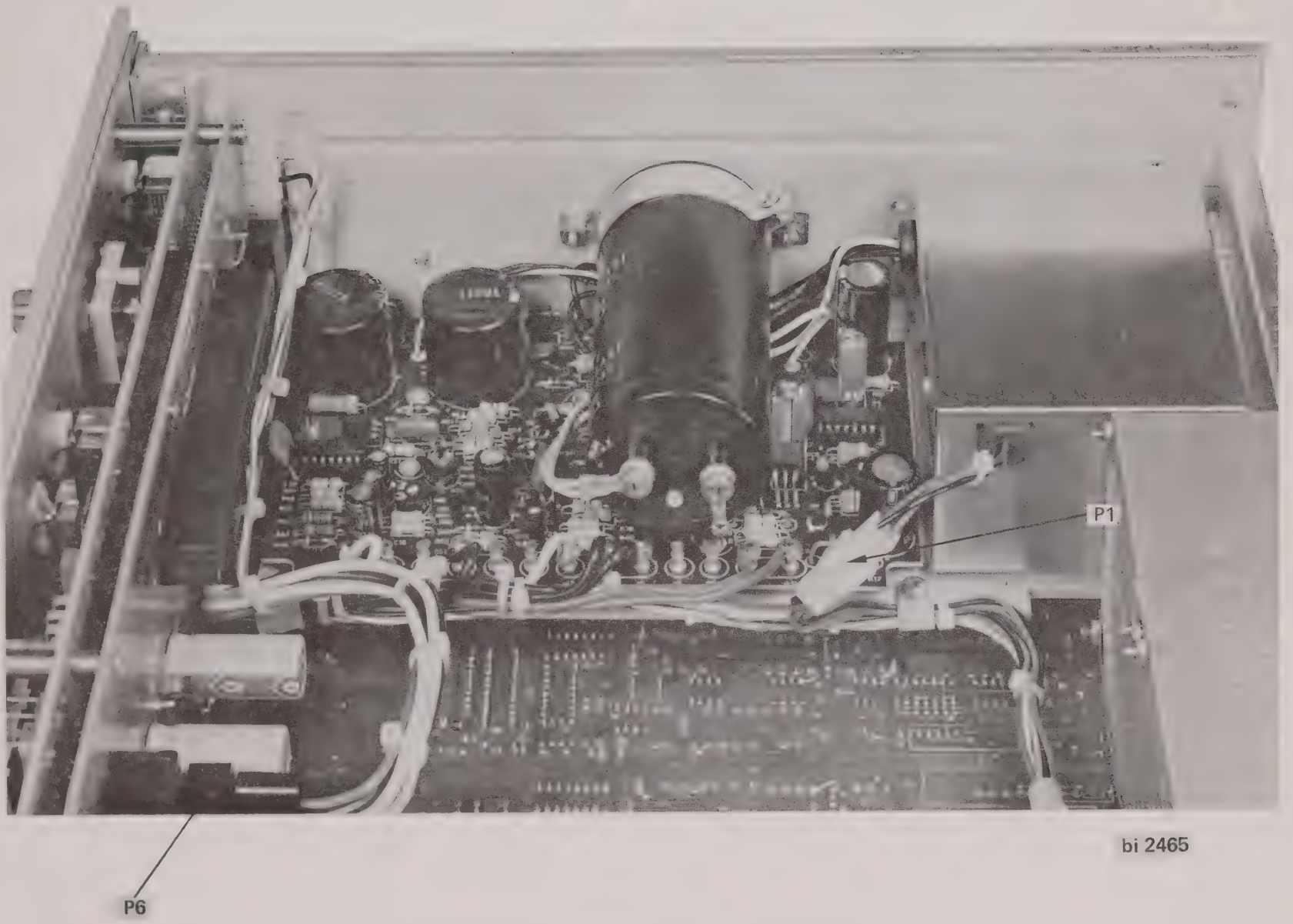

FIGURE 5-8 POWER SUPPLY REMOVAL P6, P1

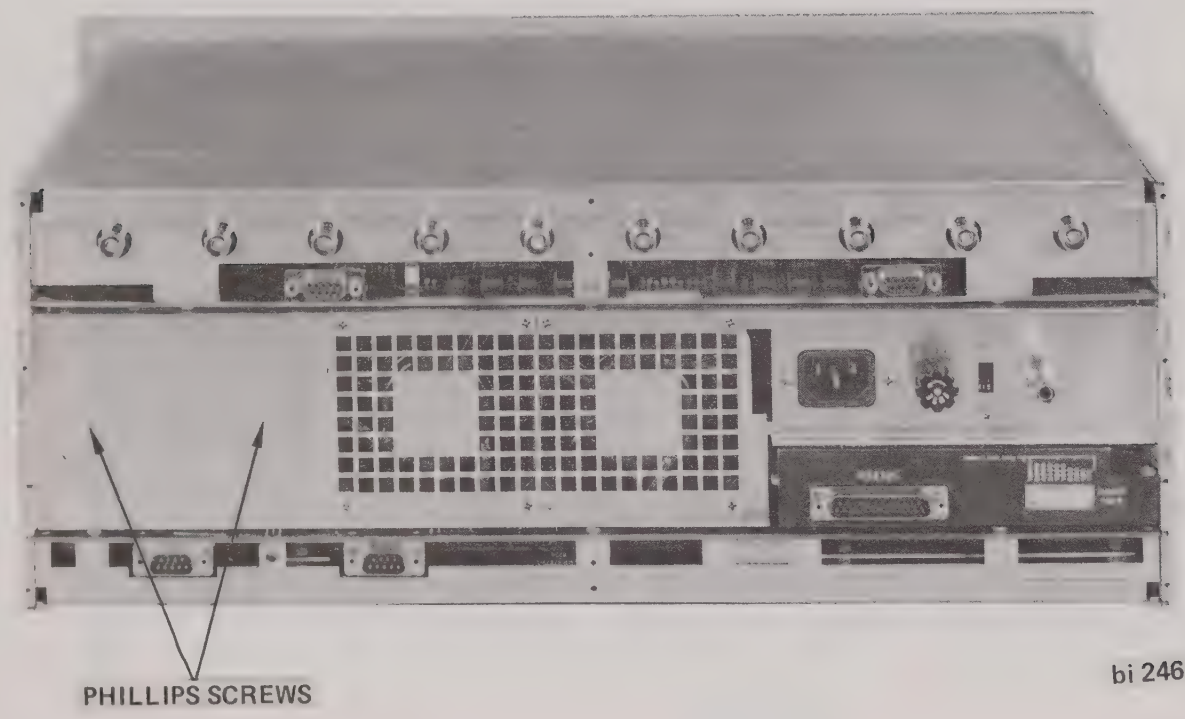

FIGURE 5-9 POWER SUPPLY REMOVAL PHILLIPS SCREWS

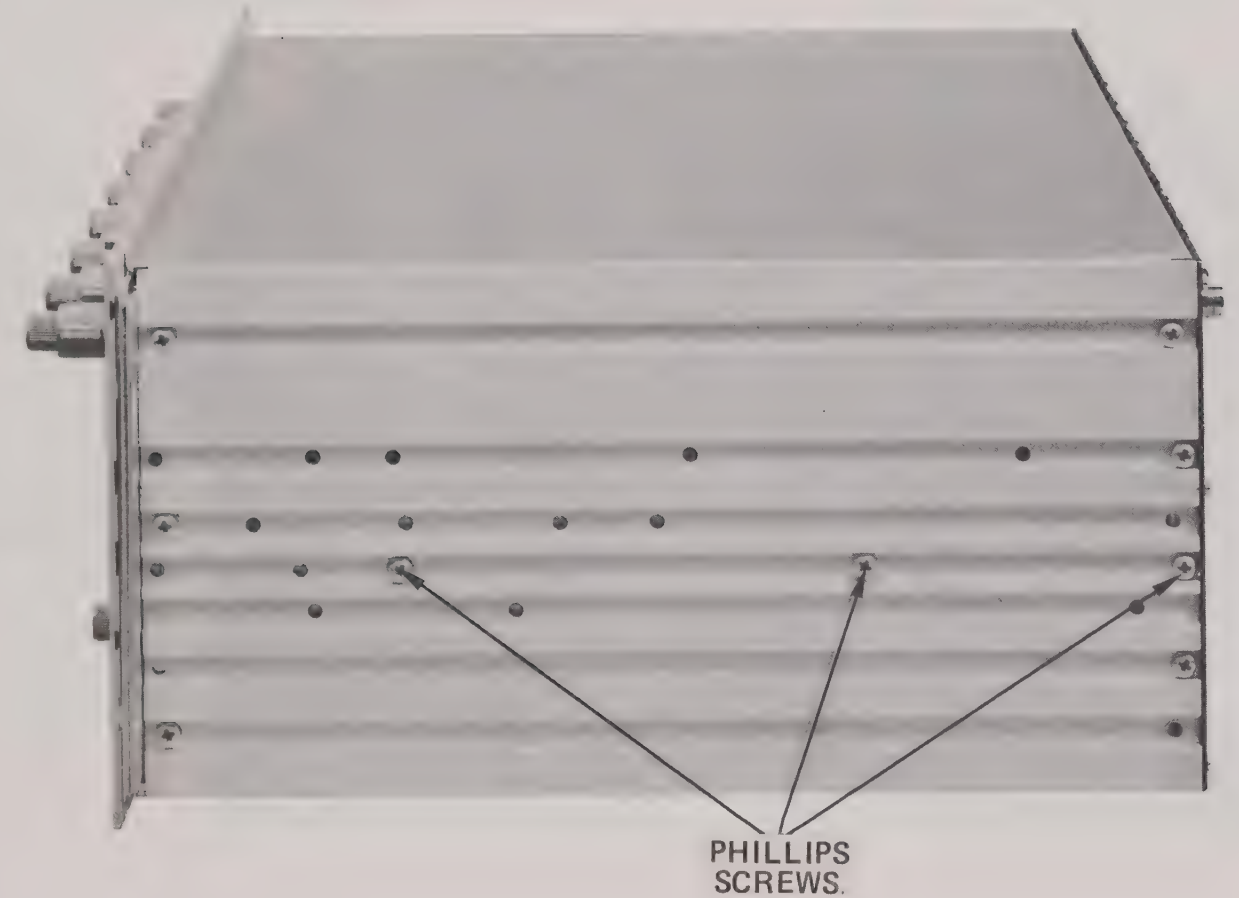

FIGURE 5-10 POWER SUPPLY REMOVAL PHILLIPS SCREWS

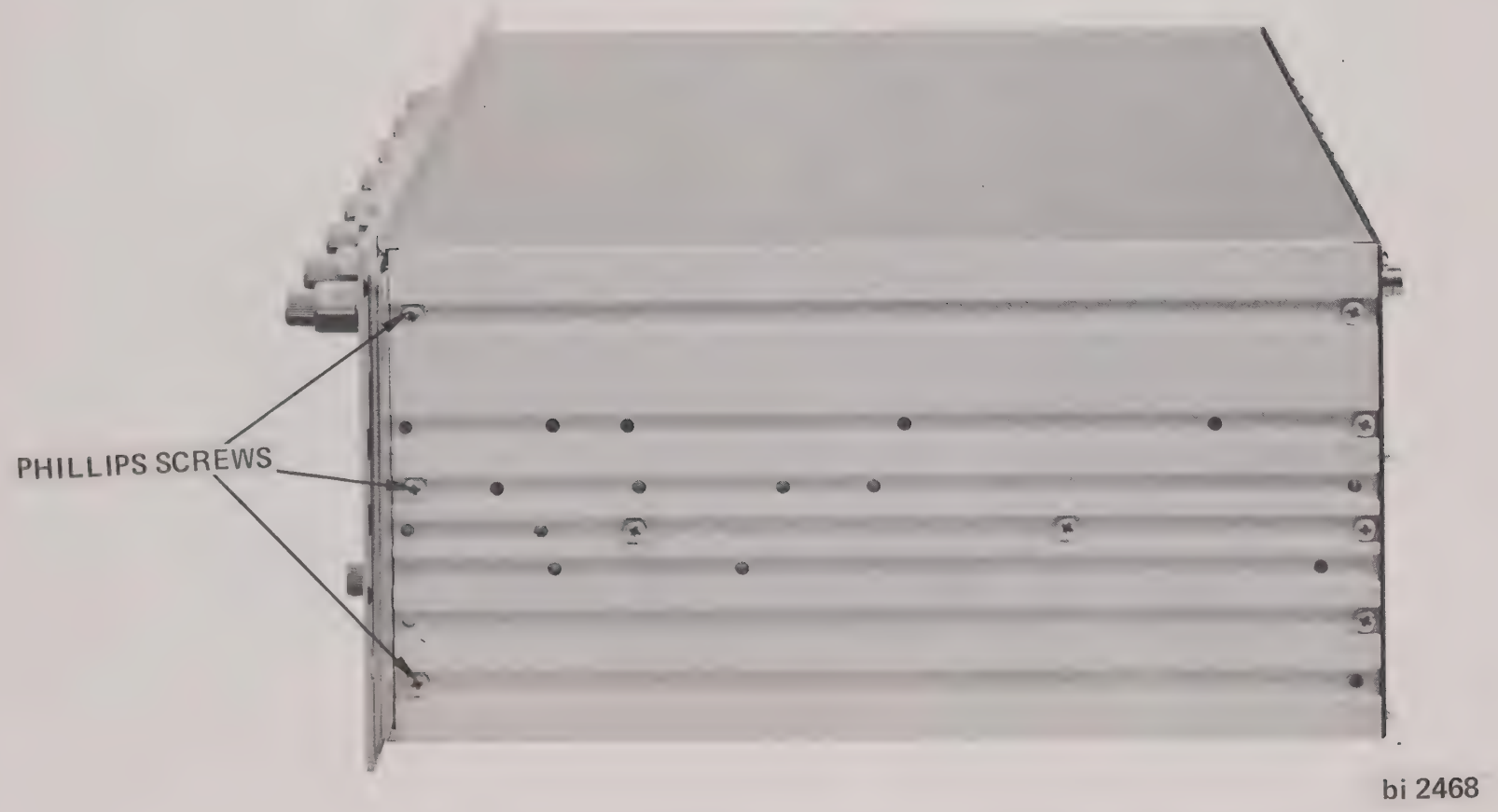

FIGURE 5-11 PHILLIPS SCREWS SANDWICH ASSEMBLY

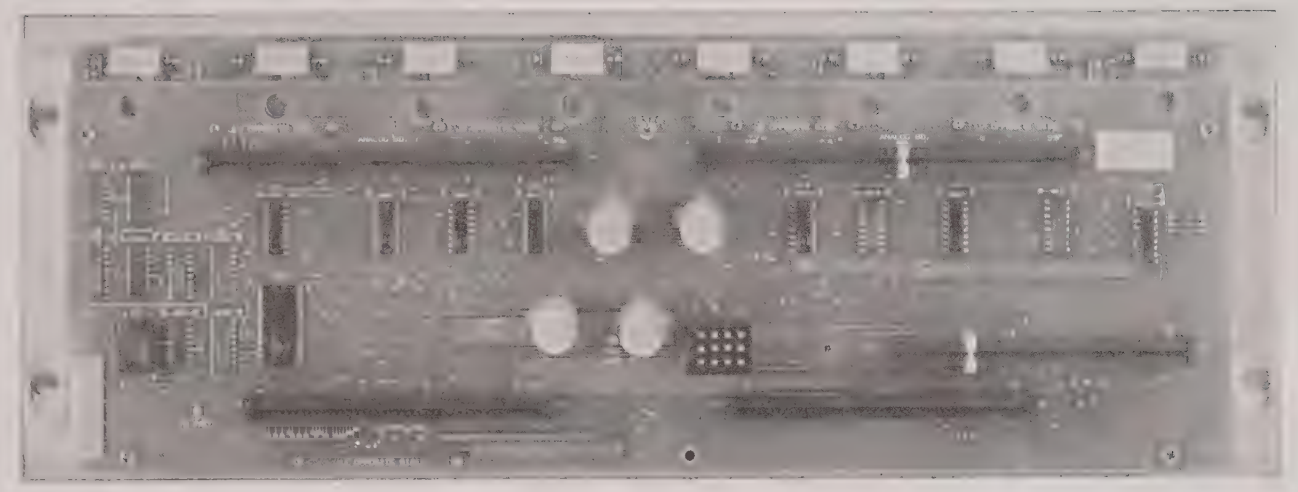

bi 2469

FIGURE 5-12 FRONT PANEL SANDWICH ASSEMBLY

SECTION VI

PARTS IDENTIFICATION

6.1 GENERAL

This Gould 13-4XX6-00 Multichannel Recorder has been accurately calibrated and adjusted before shipment from the factory, and should give long troublefree service. For servicing beyond the scope of the instructions contained in this manual or the technical equipment available, contact your nearest Gould Service Engineer listed on the warranty card shipped with the recorder.

The following parts lists and schematic diagrams are designed to assist in servicing and repairing the recorder. For replacement parts, refer to the appropriate Figure and Parts List that follow.

To assure prompt and satisfactory delivery of replacement parts, include the following information with your purchase order:

1. Name and model number of the instrument.
2. Description of part as listed in this manual.
3. Gould part number.

NOTE: Do not use the SYMBOL NUMBER from the parts list for identifying desired parts on the order.

6.2 PARTS USED ON OTHER MODELS

The USED ON column identifies the recorder on which the part is used. If code is not present, part is common to all models. Below are the codes and explanations:

CODE	EXPLANATION
A	13-4386-00 (8 channel)
B	13-4366-00 (6 channel)
C	13-4346-00 (4 channel)

MULTICHANNEL RECORDER
MODEL 13-4XX6-00
FIGURE 6-1

ITEM NUMBER	PART NUMBER	DESCRIPTION 1 2 3 4 5 6	USED ON
	13-43X6-00	Multi-Channel Waveform Assembly, Stand-Alone	
1	496695-1	Label, Waveform	
2	13-4186-00	Amplifier Assembly, 8 Ch. Waveform (See Figure 6-2)	A
3	496695-2	Label, Waveform	
4	13-4166-00	Amplifier Assembly, 6 Ch. Waveform	B
5	496695-3	Label, Waveform	
6	13-4146-00	Amplifier Assembly, 4 Ch. Waveform	C
7	895669-1	Case Assembly, Portable (See Figure 6-6)	

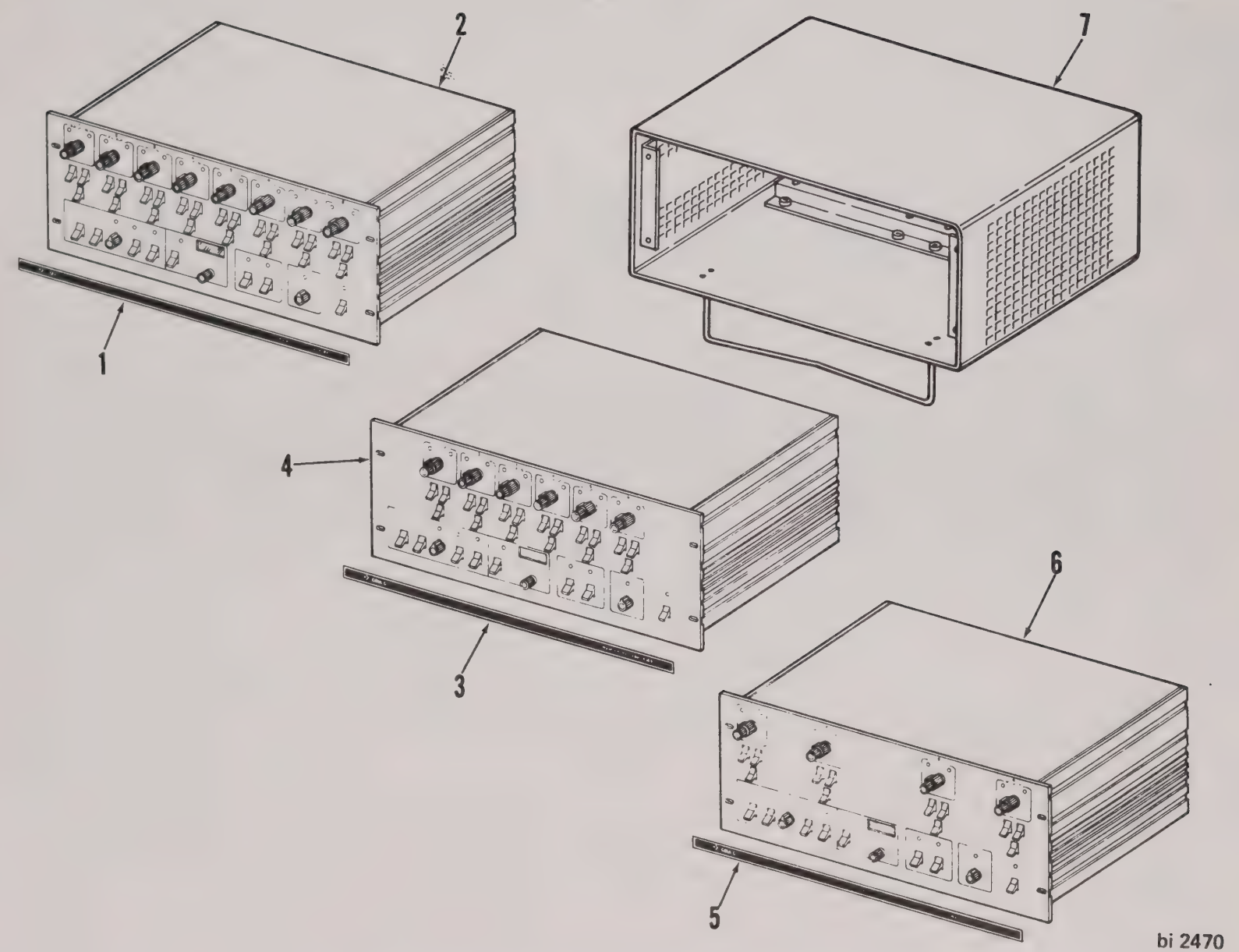

FIGURE 6-1 MULTICHANNEL RECORDER, MODEL 13-4XX6-00

MULTICHANNEL AMPLIFIER ASSEMBLY
MODEL 13-4XX6-00
FIGURE 6-2

ITEM NUMBER	PART NUMBER	DESCRIPTION 1 2 3 4 5 6	USED ON
	13-4186-00	Amplifier Assembly, 8 Channel Waveform	
1	496349	Cover, Top and Bottom	
	896359	Cover Assembly, Rear S.S. (A-P)	
	13-262716-4004	Screw	
		-- -- -- -- -- * -- -- -- -- --	
2	296455	Plate, Cover (A-P)	
	13-262716-4004	Screw	
		-- -- -- -- -- * -- -- -- -- --	
3	896359-1	Cover, Rear	A
	896359-2	Cover, Rear	B
	896359-3	Cover, Rear	C
4	296518-2	Cap, BNC Shorting (A-P)	
	16-107283-205	Rivet	
		-- -- -- -- -- * -- -- -- -- --	
5	896235	Board Assembly, Analog	A
	896235-1	Board Assembly, Analog	B
	896235-2	Board Assembly, Analog	C
6	896236	Board Assembly, Digital	A
	896236-1	Board Assembly, Digital	B
	896236-2	Board Assembly, Digital	C
		(A-P) Items 5 & 6	
	13-262716-4004	Screw	
		-- -- -- -- -- * -- -- -- -- --	
	696459	Filter, Fan	
7	296610	Filter, Air	
8	116198-29	Fuse	
9	896307	Chassis Assembly (See Figure 6-3)	
	896357	Panel Assembly, Front S.S.	
10	270261-2	Stud, Ball	
11	296453	Stud, Screw	
12	396569	Lens	
13	296568	Filter (A-P)	
	280760-1	Tape	
		-- -- -- -- -- * -- -- -- -- --	
14	496348	Shape, Extruded	
15	285652-9	Knob	
16	285651-12	Knob	
17	285651-14	Knob	
18	285653-1	Knob (Lower Concentric)	

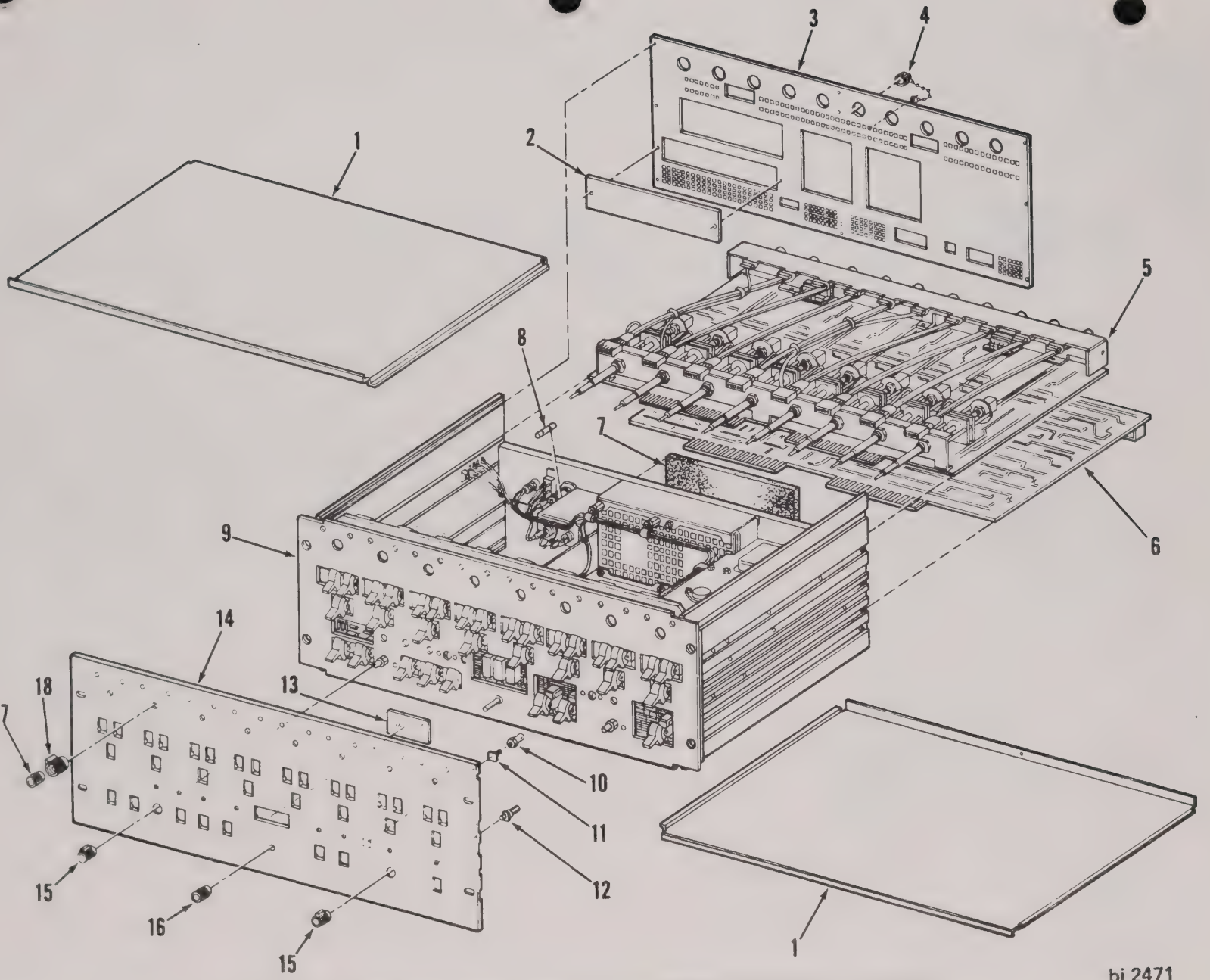

FIGURE 6-2 MULTICHANNEL AMPLIFIER ASSEMBLY, MODEL 13-4XX6-00

MULTICHANNEL CHASSIS ASSEMBLY
MODEL 13-4XX6-00
FIGURE 6-3

ITEM NUMBER	PART NUMBER	DESCRIPTION 1 2 3 4 5 6	USED ON
	896307	Chassis Assembly	
1	896343	Panel, Sub-Front	A
	896704	Panel, Sub-Front	B
	896705	Panel, Sub-Front	C
2	896344	Plate, Side	
		(A-P)	
	13-262716-8204	Screw	
		-- -- -- -- -- * -- -- -- -- --	
	896402	Board Assembly, Front Panel - Intercon. Bd.	A
	896402-1	Board Assembly, Front Panel - Intercon. Bd.	B
	896402-2	Board Assembly, Front Panel - Intercon. Bd.	C
		(A-P)	
	31-119918-6213	Screw	
	1-216741-420	Lockwasher	
		-- -- -- -- -- * -- -- -- -- --	
3	896233	Board Assembly, Front Panel	A
	896233-1	Board Assembly, Front Panel	B
	896233-2	Board Assembly, Front Panel	C
		(A-P)	
	31-119918-2604	Screw	
	1-216741-401	Lockwasher	
		-- -- -- -- -- * -- -- -- -- --	
4	896234	Board Assembly, Interconnect	
5	296366-2	Connector	
6	296366-1	Connector	
	796585	Bracket Assembly, Guide	
		(A-P)	
	13-262716-4004	Screw	
		-- -- -- -- -- * -- -- -- -- --	
7	396354	Bracket, Guide	
8	296506	Spacer	
9	296377-1	Cut-out, Thermal	
		(A-P)	
	243898-62	Nut Assembly	
	31-119918-6210	Screw	
		-- -- -- -- -- * -- -- -- -- --	
10	124804-2	Clamp, Cable	
		(A-P)	
	5-120052-305	Lockwasher, Int. Tooth	
	31-119918-6206	Screw	
		-- -- -- -- -- * -- -- -- -- --	
11	896582	Bracket Assembly, Rear (See Figure 6-5)	
		(A-P)	
	13-262716-8204	Screw	
		-- -- -- -- -- * -- -- -- -- --	
12	896643	Power Supply Assembly (See Figure 6-4)	
		(A-P)	
	13-262716-8206	Screw	
	13-262716-8204	Screw	
		-- -- -- -- -- * -- -- -- -- --	

MULTICHANNEL CHASSIS ASSEMBLY
MODEL 13-4XX6-00
FIGURE 6-3 (continued)

ITEM NUMBER	PART NUMBER	DESCRIPTION 1 2 3 4 5 6	USED ON
13	124804-4	Clamp, Cable (A-P)	
	31-119918-8206	Screw	
	243898-82	Nut Assembly	
		-- -- -- -- -- * -- -- -- -- --	
	896360	Harness Assembly	
14	265814-4	Terminal Board (A-P)	
	31-119918-6208	Screw	
	243898-62	Nut Assembly	
		-- -- -- -- -- * -- -- -- -- --	
15	265015	Lug	
16	247188	Switch (A-P)	
	1-216741-410	Lockwasher	
	31-119918-4003	Screw	
		-- -- -- -- -- * -- -- -- -- --	
17	2-291417-2	Lug	
18	270154-1	Contact	
19	9-270159-4	Connector	
20	281506-1	Contact	
21	9-281501-10	Connector	
22	281504	Key	

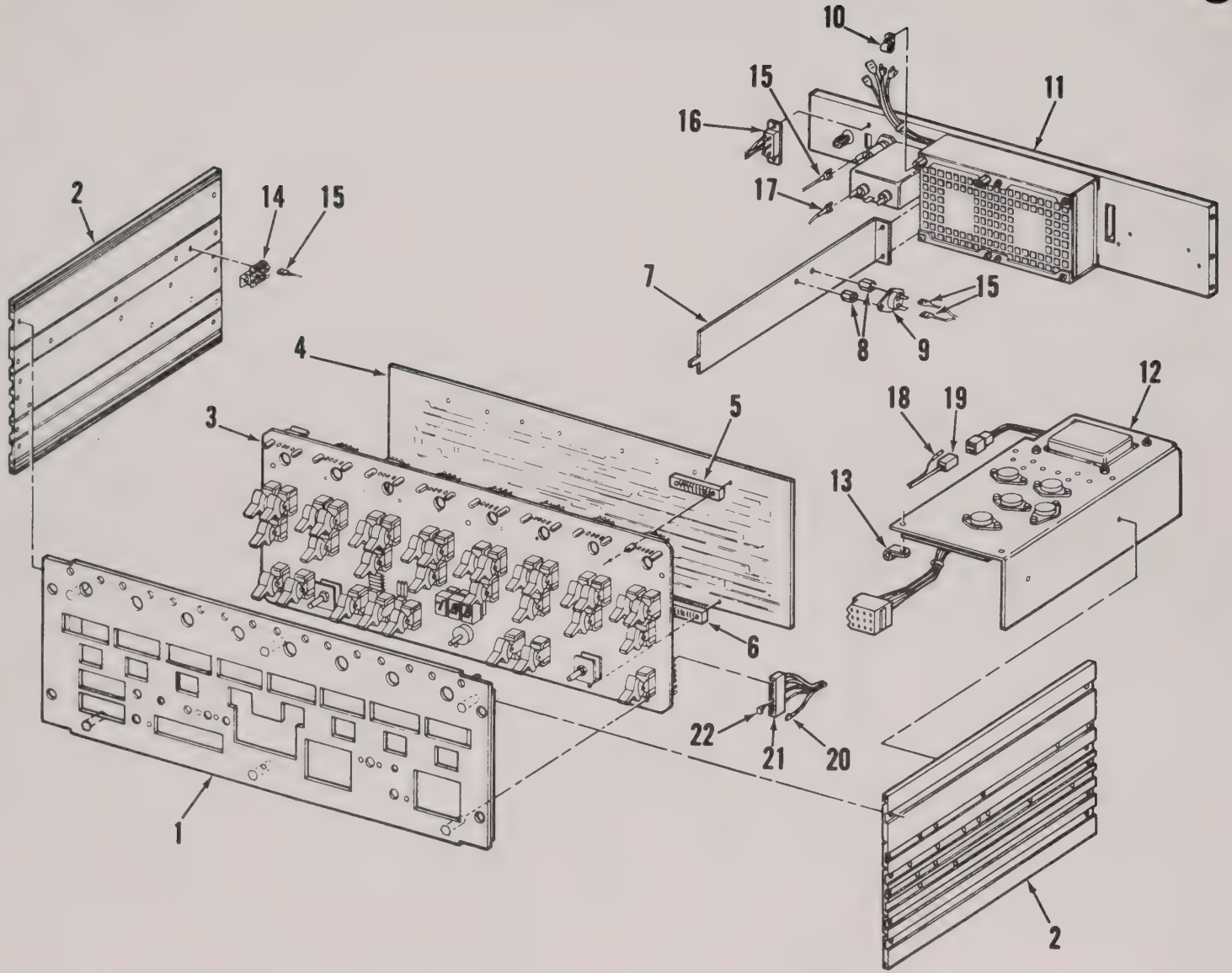

FIGURE 6-3 MULTICHANNEL CHASSIS ASSEMBLY, MODEL 13-4XX6-00

bi 2472

EXPLODED VIEW PARTS LIST
MULTICHANNEL RECORDER POWER SUPPLY
MODEL 13-4XX6-00
FIGURE 6-4

ITEM NUMBER	PART NUMBER	DESCRIPTION 1 2 3 4 5 6	USED ON
	896643	Power Supply Assembly	
	896411	Harness Assembly, D.C.	
1	0-247923-121	Connector	
2	1-282926-1	Contact, Female	
3	296648	Power Supply	
4	296607-2	Cover, Transformer	
5	496641	Shield, Transformer	
6	296647	Insulator	
7	396600	Cover (A-P)	
	13-262716-4004	Screw	
	796644	Harness Assembly, Transformer	
		-- -- -- -- -- * -- -- -- -- --	
8	270153-1	Contact	
9	9-270158-4	Connector	
10	123108-44	Grommet	

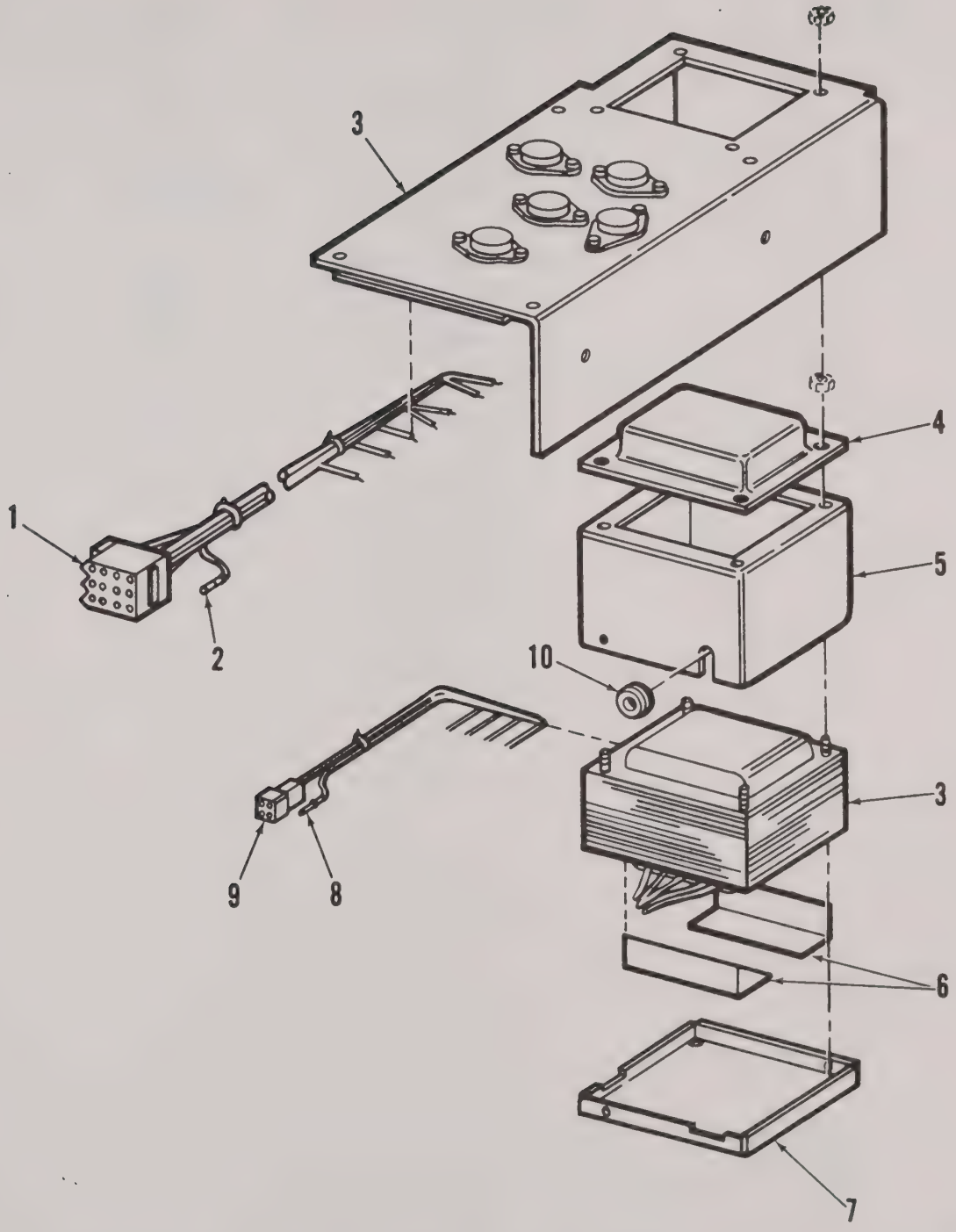

FIGURE 6-4 MULTICHANNEL RECORDER POWER SUPPLY, MODEL 13-4XX6-00

EXPLODED VIEW PARTS LIST
MULTICHANNEL RECORDER BRACKET ASSEMBLY REAR
FIGURE 6-5

ITEM NUMBER	PART NUMBER	DESCRIPTION 1 2 3 4 5 6	USED ON
	896582	Bracket Assembly, Rear	
1	296420	Insulator, Fan	
		(A-P)	
	31-129647-62	Nut	
	5-120052-305	Washer, Int. Tooth	
	31-119918-6232	Screw	
		-- -- -- -- -- * -- -- -- -- --	
2	296598	Shield, Fan Radiation	
3	244501-12	Spacer	
4	796458-2	Fan Assembly	
5	796458-1	Fan Assembly	
6	265015	Lug	
7	296370-1	Filter, A.C.	
		(A-P)	
	31-119918-6204	Screw	
	1-216741-420	Lockwasher	
		-- -- -- -- -- * -- -- -- -- --	
8	281588	Post, Binding	
		(A-P)	
	10-120053-104	Washer, Star	
		-- -- -- -- -- * -- -- -- -- --	
9	129758-1	Fuseholder	
10	496350	Bracket, Rear	

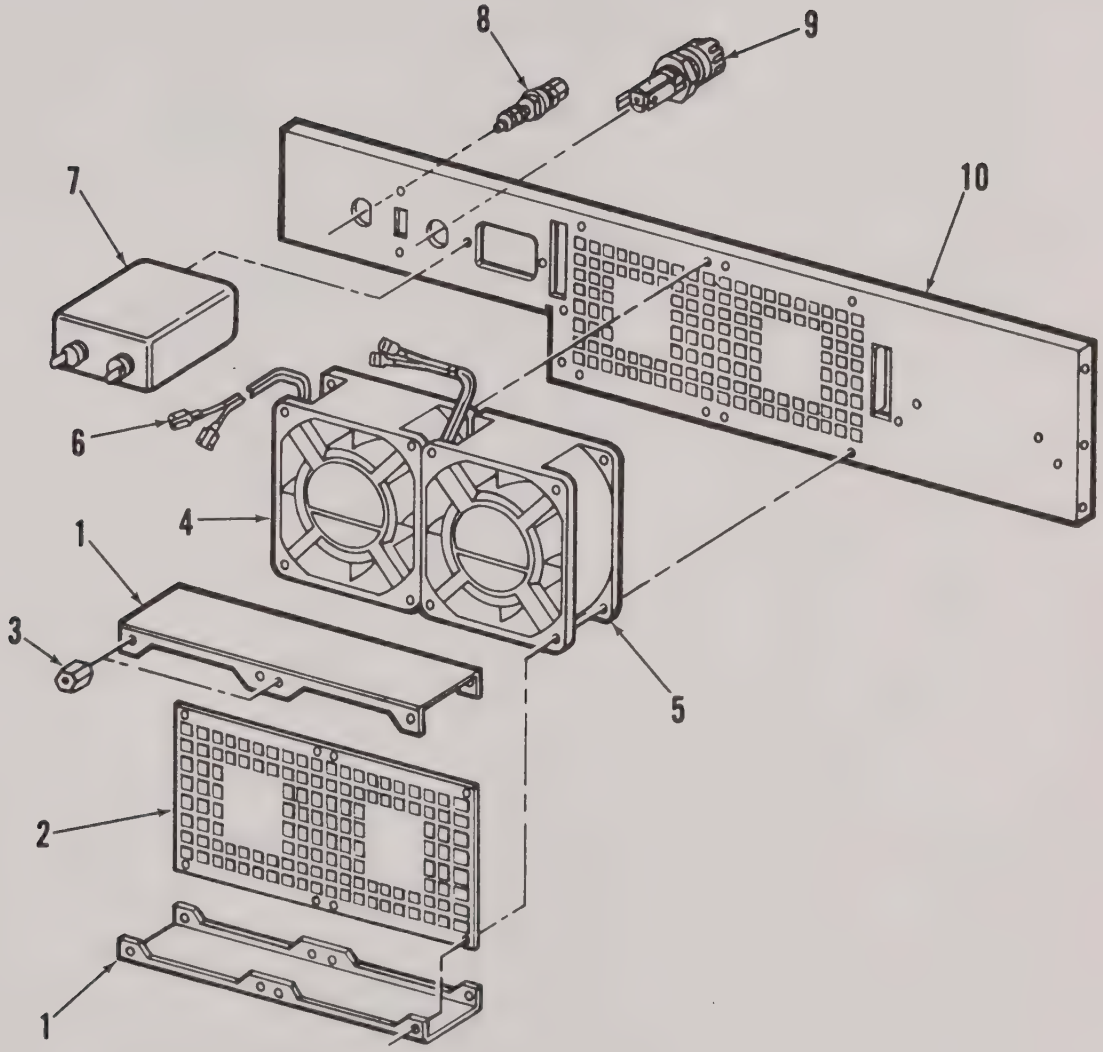

bi 2474

FIGURE 6-5 MULTICHANNEL RECORDER BRACKET ASSEMBLY REAR

EXPLODED VIEW PARTS LIST
CASE ASSEMBLY, 895669-1
FIGURE 6-6

ITEM NUMBER	PART NUMBER	DESCRIPTION 1 2 3 4 5 6	REMARKS
	895669-1	Case Assembly, Portable	
1	688528	Support, Handle (A-P)	
	243898-82	Nut, Assembled - L.W.	
		-- -- -- -- -- * -- -- -- -- --	
2	685518-2	Handle	
3	286097-1	Strap, Handle	
4	788532-1	Strap	
5	895613	Case Subassembly, Portable	
6	2-266107-5	Bail, Entire Assembly (A-P)	
	31-119918-6207	Screw	
	4-109142-8	Washer, Flat	
	31-119918-6209	Screw	
	1-216741-420	Lockwasher	
		-- -- -- -- -- * -- -- -- -- --	

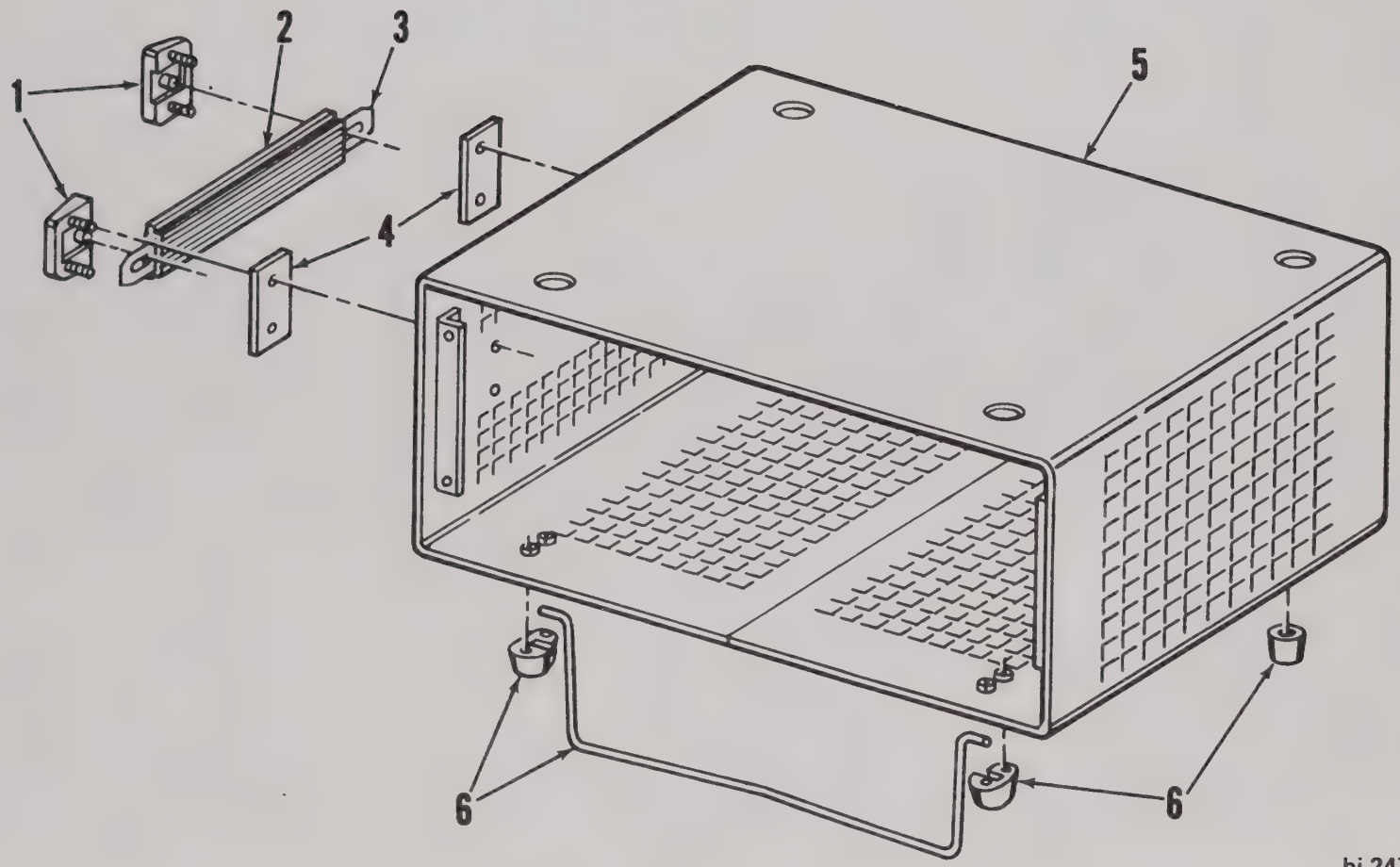

FIGURE 6-6 CASE ASSEMBLY, 895669-1

MULTI-CHANNEL WAVEFORM RECORDER
BOARD ASSEMBLY, DIGITAL - 896236
FIGURE 6-7 (8 Channel)

SYMBOL NUMBER	PART NUMBER	DESCRIPTION
C1	287620-227	Capacitor, 2.2 ufd
C2	10-291759-473	Capacitor, .047 ufd
C3-C14	263343-156	Capacitor, 15 ufd
C15, C16	20-263695-156	Capacitor, 15 ufd
C17	263343-156	Capacitor, 15 ufd
C18-C77	288755-104	Capacitor, .1 ufd
C106	288755-104	Capacitor, .1 ufd
C206	288755-104	Capacitor, .1 ufd
C306	288755-104	Capacitor, .1 ufd
C406	288755-104	Capacitor, .1 ufd
C506	288755-104	Capacitor, .1 ufd
C606	288755-104	Capacitor, .1 ufd
C706	288755-104	Capacitor, .1 ufd
C806	288755-104	Capacitor, .1 ufd
C102	288755-104	Capacitor, .1 ufd
C202	288755-104	Capacitor, .1 ufd
C302	288755-104	Capacitor, .1 ufd
C402	288755-104	Capacitor, .1 ufd
C502	288755-104	Capacitor, .1 ufd
C602	288755-104	Capacitor, .1 ufd
C702	288755-104	Capacitor, .1 ufd
C802	288755-104	Capacitor, .1 ufd
C104	288755-104	Capacitor, .1 ufd
C204	288755-104	Capacitor, .1 ufd
C304	288755-104	Capacitor, .1 ufd
C404	288755-104	Capacitor, .1 ufd
C504	288755-104	Capacitor, .1 ufd
C604	288755-104	Capacitor, .1 ufd
C704	288755-104	Capacitor, .1 ufd
C804	288755-104	Capacitor, .1 ufd
C101	288755-104	Capacitor, .1 ufd
C201	288755-104	Capacitor, .1 ufd
C301	288755-104	Capacitor, .1 ufd
C401	288755-104	Capacitor, .1 ufd
C501	288755-104	Capacitor, .1 ufd
C601	288755-104	Capacitor, .1 ufd
C701	288755-104	Capacitor, .1 ufd
C801	288755-104	Capacitor, .1 ufd
C103	288755-104	Capacitor, .1 ufd
C203	288755-104	Capacitor, .1 ufd

MULTI-CHANNEL WAVEFORM RECORDER
BOARD ASSEMBLY, DIGITAL - 896236
FIGURE 6-7 (8 Channel) (Continued)

SYMBOL NUMBER	PART NUMBER	DESCRIPTION
C303	288755-104	Capacitor, .1 ufd
C403	288755-104	Capacitor, .1 ufd
C503	288755-104	Capacitor, .1 ufd
C603	288755-104	Capacitor, .1 ufd
C703	288755-104	Capacitor, .1 ufd
C803	288755-104	Capacitor, .1 ufd
C105	288755-104	Capacitor, .1 ufd
C205	288755-104	Capacitor, .1 ufd
C305	288755-104	Capacitor, .1 ufd
C405	288755-104	Capacitor, .1 ufd
C505	288755-104	Capacitor, .1 ufd
C605	288755-104	Capacitor, .1 ufd
C705	288755-104	Capacitor, .1 ufd
C805	288755-104	Capacitor, .1 ufd
C159	288755-104	Capacitor, .1 ufd
C259	288755-104	Capacitor, .1 ufd
C359	288755-104	Capacitor, .1 ufd
C459	288755-104	Capacitor, .1 ufd
C559	288755-104	Capacitor, .1 ufd
C659	288755-104	Capacitor, .1 ufd
C759	288755-104	Capacitor, .1 ufd
C859	288755-104	Capacitor, .1 ufd
C160	288755-104	Capacitor, .1 ufd
C260	288755-104	Capacitor, .1 ufd
C360	288755-104	Capacitor, .1 ufd
C460	288755-104	Capacitor, .1 ufd
C560	288755-104	Capacitor, .1 ufd
C660	288755-104	Capacitor, .1 ufd
C760	288755-104	Capacitor, .1 ufd
C860	288755-104	Capacitor, .1 ufd
CR1	269256-7	Diode, 1N4007
CR2, CR3	280440	Diode, 1N4148
J3, J4	296508-9	Connector, Male
J5	296509-9	Connector, Female
K1	293735-6	Relay, Dry Reed
K2, K3	296507	Relay, DIP
R101	R1-284694-25000	Resistor, 1/4W, .1%, 2.5 Kohm
R201	R1-284694-25000	Resistor, 1/4W, .1%, 2.5 Kohm
R301	R1-284694-25000	Resistor, 1/4W, .1%, 2.5 Kohm
R401	R1-284694-25000	Resistor, 1/4W, .1%, 2.5 Kohm

MULTI-CHANNEL WAVEFORM RECORDER
BOARD ASSEMBLY, DIGITAL - 896236
FIGURE 6-7 (8 Channel) (Continued)

SYMBOL NUMBER	PART NUMBER	DESCRIPTION
R501	R1-284694-25000	Resistor, 1/4W, .1%, 2.5 Kohm
R601	R1-284694-25000	Resistor, 1/4W, .1%, 2.5 Kohm
R701	R1-284694-25000	Resistor, 1/4W, .1%, 2.5 Kohm
R801	R1-284694-25000	Resistor, 1/4W, .1%, 2.5 Kohm
R102	R1-284694-25000	Resistor, 1/4W, .1%, 2.5 Kohm
R202	R1-284694-25000	Resistor, 1/4W, .1%, 2.5 Kohm
R302	R1-284694-25000	Resistor, 1/4W, .1%, 2.5 Kohm
R402	R1-284694-25000	Resistor, 1/4W, .1%, 2.5 Kohm
R502	R1-284694-25000	Resistor, 1/4W, .1%, 2.5 Kohm
R602	R1-284694-25000	Resistor, 1/4W, .1%, 2.5 Kohm
R702	R1-284694-25000	Resistor, 1/4W, .1%, 2.5 Kohm
R802	R1-284694-25000	Resistor, 1/4W, .1%, 2.5 Kohm
R103, R104	R1-288308-15000	Resistor, 1/4W, .1%, 1.5 Kohm
R203, R204	R1-288308-15000	Resistor, 1/4W, .1%, 1.5 Kohm
R303, R304	R1-288308-15000	Resistor, 1/4W, .1%, 1.5 Kohm
R403, R404	R1-288308-15000	Resistor, 1/4W, .1%, 1.5 Kohm
R503, R504	R1-288308-15000	Resistor, 1/4W, .1%, 1.5 Kohm
R603, R604	R1-288308-15000	Resistor, 1/4W, .1%, 1.5 Kohm
R703, R704	R1-288308-15000	Resistor, 1/4W, .1%, 1.5 Kohm
R803, R804	R1-288308-15000	Resistor, 1/4W, .1%, 1.5 Kohm
R105, R205	R1-288308-12500	Resistor, 1/4W, .1%, 1.25 Kohm
R305, R405	R1-288308-12500	Resistor, 1/4W, .1%, 1.25 Kohm
R505, R605	R1-288308-12500	Resistor, 1/4W, .1%, 1.25 Kohm
R705, R805	R1-288308-12500	Resistor, 1/4W, .1%, 1.25 Kohm
R106, R206	R1-288308-12500	Resistor, 1/4W, .1%, 1.25 Kohm
R306, R406	R1-288308-12500	Resistor, 1/4W, .1%, 1.25 Kohm
R506, R606	R1-288308-12500	Resistor, 1/4W, .1%, 1.25 Kohm
R706, R806	R1-288308-12500	Resistor, 1/4W, .1%, 1.25 Kohm
R107	1-281851-25003	Resistor, 1/8W, 1%, 2.5 Mohm
R207	1-281851-25003	Resistor, 1/8W, 1%, 2.5 Mohm
R307	1-281851-25003	Resistor, 1/8W, 1%, 2.5 Mohm
R407	1-281851-25003	Resistor, 1/8W, 1%, 2.5 Mohm
R507	1-281851-25003	Resistor, 1/8W, 1%, 2.5 Mohm
R607	1-281851-25003	Resistor, 1/8W, 1%, 2.5 Mohm
R707	1-281851-25003	Resistor, 1/8W, 1%, 2.5 Mohm
R807	1-281851-25003	Resistor, 1/8W, 1%, 2.5 Mohm
R109	1-296265-750R0	Resistor, .1%, 750 ohm
R209	1-296265-750R0	Resistor, .1%, 750 ohm
R309	1-296265-750R0	Resistor, .1%, 750 ohm
R409	1-296265-750R0	Resistor, .1%, 750 ohm

MULTI-CHANNEL WAVEFORM RECORDER
BOARD ASSEMBLY, DIGITAL - 896236
FIGURE 6-7 (8 Channel) (Continued)

SYMBOL NUMBER	PART NUMBER	DESCRIPTION
R509	1-296265-750R0	Resistor, .1%, 750 ohm
R609	1-296265-750R0	Resistor, .1%, 750 ohm
R709	1-296265-750R0	Resistor, .1%, 750 ohm
R809	1-296265-750R0	Resistor, .1%, 750 ohm
R108	1-296265-750R0	Resistor, .1%, 750 ohm
R208	1-296265-750R0	Resistor, .1%, 750 ohm
R308	1-296265-750R0	Resistor, .1%, 750 ohm
R408	1-296265-750R0	Resistor, .1%, 750 ohm
R508	1-296265-750R0	Resistor, .1%, 750 ohm
R608	1-296265-750R0	Resistor, .1%, 750 ohm
R708	1-296265-750R0	Resistor, .1%, 750 ohm
R808	1-296265-750R0	Resistor, .1%, 750 ohm
R110	5-241111-271	Resistor, 10 Kohm
R210	5-241111-271	Resistor, 10 Kohm
R310	5-241111-271	Resistor, 10 Kohm
R410	5-241111-271	Resistor, 10 Kohm
R510	5-241111-271	Resistor, 10 Kohm
R610	5-241111-271	Resistor, 10 Kohm
R710	5-241111-271	Resistor, 10 Kohm
R810	5-241111-271	Resistor, 10 Kohm
R1	269085-203	Resistor, Variable, 20 Kohm
R2-R5	5-241111-271	Resistor, 270 ohm
R6-R9	5-241111-154	Resistor, 150 Kohm
R11	5-241111-332	Resistor, 3.3 Kohm
RN1-RN6	296511-222	Resistor Network
R12	5-241111-333	Resistor, 33 Kohm
S1	295642-1	Switch, DIP
S2	296270	Switch, Slide, 3 Position
S3	289742	Switch, SPDT
S4	286142-8	Switch, DIP, 8 Position
J5	296278-1	Socket, Rt. Angle
J100	296510-8	Connector
J200	296510-8	Connector
J300	296510-8	Connector
J400	296510-8	Connector
J500	296510-8	Connector
J600	296510-8	Connector
J700	296510-8	Connector
J800	296510-8	Connector
J100	287491-8	Connector

MULTI-CHANNEL WAVEFORM RECORDER
BOARD ASSEMBLY, DIGITAL - 896236
FIGURE 6-7 (8 Channel) (Continued)

SYMBOL NUMBER	PART NUMBER	DESCRIPTION
J200	287491-8	Connector
J300	287491-8	Connector
J400	287491-8	Connector
J500	287491-8	Connector
J600	287491-8	Connector
J700	287491-8	Connector
J800	287491-8	Connector
J100	4-287490	Contact
J200	4-287490	Contact
J300	4-287490	Contact
J400	4-287490	Contact
J500	4-287490	Contact
J600	4-287490	Contact
J700	4-287490	Contact
J800	4-287490	Contact
J6	296510-24	Connector
U1	294662	I.C., REF-02
U2	292719	I.C., OP11EY
U3, U44	290169-244	I.C., 74LS244
U104	290169-244	I.C., 74LS244
U204	290169-244	I.C., 74LS244
U304	290169-244	I.C., 74LS244
U404	290169-244	I.C., 74LS244
U504	290169-244	I.C., 74LS244
U604	290169-244	I.C., 74LS244
U704	290169-244	I.C., 74LS244
U804	290169-244	I.C., 74LS244
U4	290169-14	I.C., 74LS14
U5, U7	290169-74	I.C., 74LS74
U11, U18	290169-74	I.C., 74LS74
U23, U24	290169-74	I.C., 74LS74
U37, U39	290169-74	I.C., 74LS74
U41, U43	290169-74	I.C., 74LS74
U46, U48	290169-74	I.C., 74LS74
U6, U8	290169-02	I.C., 74LS02
U17, U38	290169-02	I.C., 74LS02
U9	290169-112	I.C., 74LS112
U10, U14	290169-161	I.C., 74LS161
U25, U40	290169-161	I.C., 74LS161
U53, U58	290169-161	I.C., 74LS161

MULTI-CHANNEL WAVEFORM RECORDER
BOARD ASSEMBLY, DIGITAL - 896236
FIGURE 6-7 (8 Channel) (Continued)

SYMBOL NUMBER	PART NUMBER	DESCRIPTION
U59, U60	290169-161	I.C., 74LS161
U63	290169-161	I.C., 74LS161
U12, U32	281105	I.C., 7474
U13	290169-27	I.C., 74LS27
U15	291235-132	I.C., 74L32
U16	290169-11	I.C., 74LS11
U19, U22	290169-08	I.C., 74LS08
U27, U29	290169-08	I.C., 74LS08
U51, U54	290169-08	I.C., 74LS08
U20	290169-138	I.C., 74LS138
U21, U36	290169-32	I.C., 74LS32
U26	290169-109	I.C., 74LS109
U28, U50	290169-04	I.C., 74LS04
U64, U65	290169-04	I.C., 74LS04
U66	290169-04	I.C., 74LS04
U30	290169-175	I.C., 74LS175
U31	296264-2	I.C., PAL 1677
U33	290169-12	I.C., 74LS12
U34	291069-03	I.C., 74LS03
U35, U42	290169-157	I.C., 74LS157
U47	290169-00	I.C., 74LS00
U49, U52	296512	I.C., 75472
U55-U57	287735	I.C., 74150
U67	290169-273	I.C., 74LS273
U106	290169-273	I.C., 74LS273
U206	290169-273	I.C., 74LS273
U306	290169-273	I.C., 74LS273
U406	290169-273	I.C., 74LS273
U506	290169-273	I.C., 74LS273
U606	290169-273	I.C., 74LS273
U706	290169-273	I.C., 74LS273
U806	290169-273	I.C., 74LS273
U68-U71	285589-1	I.C., 4N25
U108	292885	I.C., LF351N
U208	292885	I.C., LF351N
U308	292885	I.C., LF351N
U408	292885	I.C., LF351N
U508	292885	I.C., LF351N
U608	292885	I.C., LF351N
U708	292885	I.C., LF351N

MULTI-CHANNEL WAVEFORM RECORDER
BOARD ASSEMBLY, DIGITAL - 896236
FIGURE 6-7 (8 Channel) (Continued)

SYMBOL NUMBER	PART NUMBER	DESCRIPTION
U808	292885	I.C., LF351N
U105	290169-534	I.C., 74LS534
U205	290169-534	I.C., 74LS534
U305	290169-534	I.C., 74LS534
U405	290169-534	I.C., 74LS534
U505	290169-534	I.C., 74LS534
U605	290169-534	I.C., 74LS534
U705	290169-534	I.C., 74LS534
U805	290169-534	I.C., 74LS534
U107	296267	I.C., DAC-08
U207	296267	I.C., DAC-08
U307	296267	I.C., DAC-08
U407	296267	I.C., DAC-08
U507	296267	I.C., DAC-08
U607	296267	I.C., DAC-08
U707	296267	I.C., DAC-08
U807	296267	I.C., DAC-08
U102	296267	I.C., DAC-08
U202	296267	I.C., DAC-08
U302	296267	I.C., DAC-08
U402	296267	I.C., DAC-08
U502	296267	I.C., DAC-08
U602	296267	I.C., DAC-08
U702	296267	I.C., DAC-08
U802	296267	I.C., DAC-08
U103	296263	I.C., AM2502
U203	296263	I.C., AM2502
U303	296263	I.C., AM2502
U403	296263	I.C., AM2502
U503	296263	I.C., AM2502
U603	296263	I.C., AM2502
U703	296263	I.C., AM2502
U803	296263	I.C., AM2502
U101	296269	I.C., LM361
U201	296269	I.C., LM361
U301	296269	I.C., LM361
U401	296269	I.C., LM361
U501	296269	I.C., LM361
U601	296269	I.C., LM361
U701	296269	I.C., LM361

MULTI-CHANNEL WAVEFORM RECORDER
BOARD ASSEMBLY, DIGITAL - 896236
FIGURE 6-7 (8 Channel) (Continued)

SYMBOL NUMBER	PART NUMBER	DESCRIPTION
U801	296269	I.C., LM361
M100	296263	I.C., 4016-1 RAM
M200	296263	I.C., 4016-1 RAM
M300	296263	I.C., 4016-1 RAM
M400	296263	I.C., 4016-1 RAM
M500	296263	I.C., 4016-1 RAM
M600	296263	I.C., 4016-1 RAM
M700	296263	I.C., 4016-1 RAM
M800	296263	I.C., 4016-1 RAM
M101	296263	I.C., 4016-1 RAM
M201	296263	I.C., 4016-1 RAM
M301	296263	I.C., 4016-1 RAM
M401	296263	I.C., 4016-1 RAM
M501	296263	I.C., 4016-1 RAM
M601	296263	I.C., 4016-1 RAM
M701	296263	I.C., 4016-1 RAM
M801	296263	I.C., 4016-1 RAM

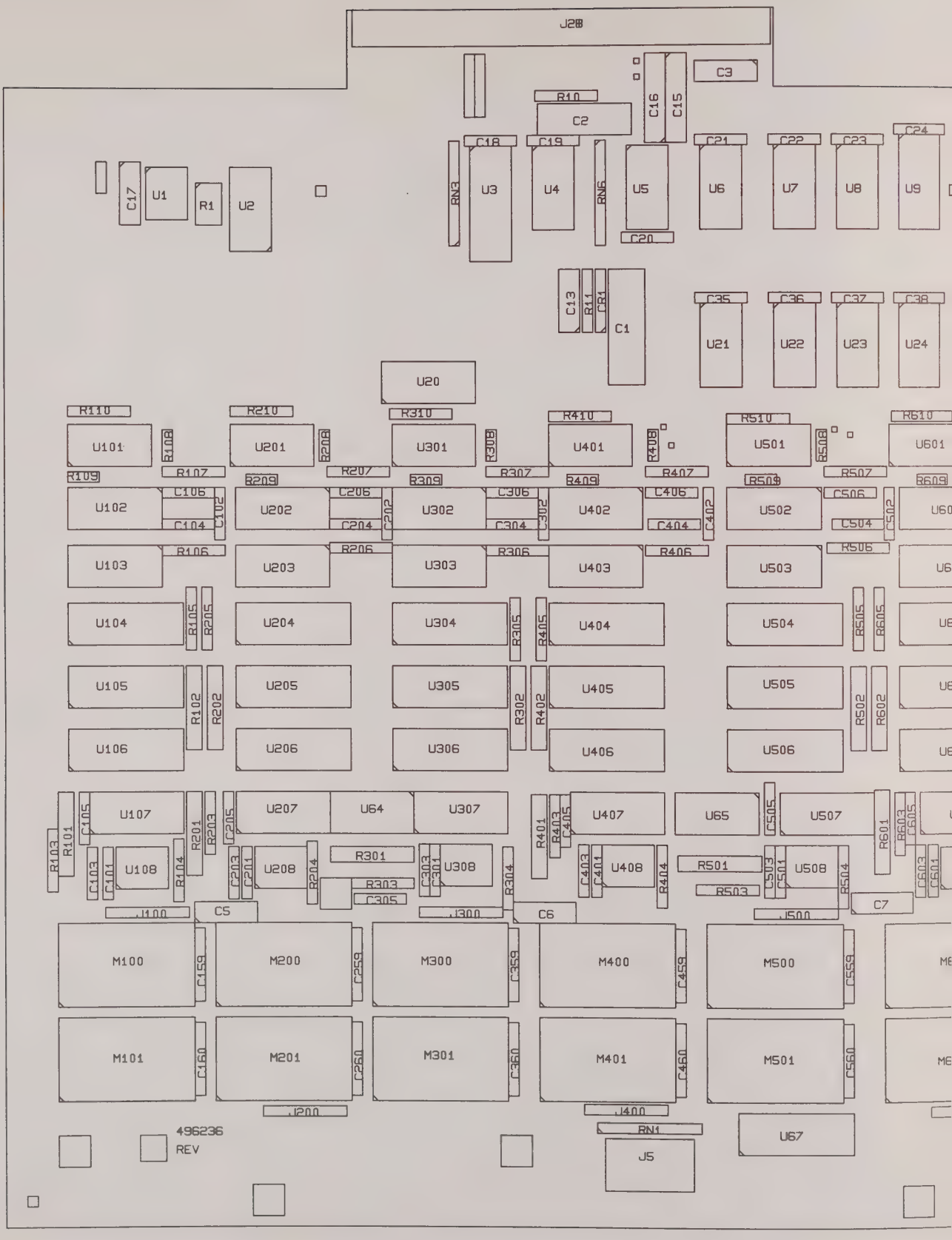

FIGURE 6-7 BOARD ASSEMBLY, DIGIT

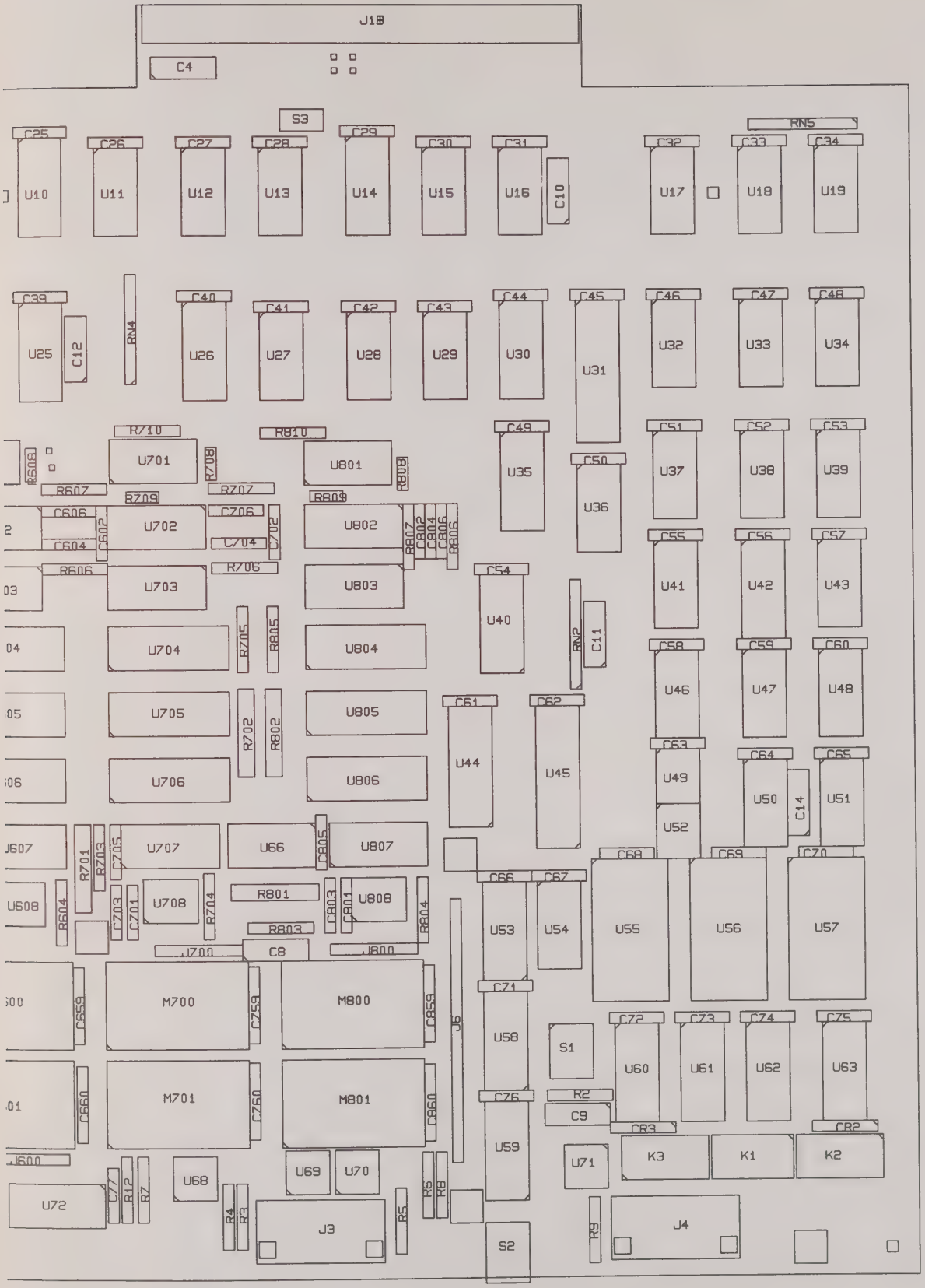
J1
C4
S3
RN5
C25
C26
C27
C28
C29
C30
C31
C32
C33
C34
U10
U11
U12
U13
U14
U15
U16
C10
U17
U18
U19
C39
C40
C41
C42
C43
C44
C45
C46
C47
C48
U25
C12
RN4
U26
U27
U28
U29
U30
U31
U32
U33
U34
R710
R810
C49
C51
C52
C53
U701
U801
U35
C50
U37
U38
U39
R607
R707
R809
U36
C606
C706
U702
U802
C604
C704
C55
C56
C57
R606
R706
U703
U803
C54
U41
U42
U43
U40
U704
R705
R805
U804
RN2
C11
C58
C59
C60
U46
U47
U48
U705
R702
R802
U805
C61
C62
U44
U45
C63
C64
C65
U706
U806
U49
U50
C14
U51
U52
U707
U66
C805
U807
C68
C69
C70
R701
R703
C705
C66
C67
U608
R604
C703
C701
U708
R704
R801
C803
C801
U808
R804
U53
U54
U55
U56
U57
R803
J700
C8
J800
C71
M700
C659
C759
M800
C859
J6
U58
S1
C72
C73
C74
C75
U60
U61
U62
U63
M701
C660
C760
M801
C860
C76
R2
C9
CR3
CR2
U59
U71
K3
K1
K2
J600
U68
U69
U70
U72
C77
R12
R7
R4
R3
J3
R5
R6
R8
R9
J4
S2

MULTI-CHANNEL WAVEFORM RECORDER
BOARD ASSEMBLY, DIGITAL - 896236-1
FIGURE 6-8 (6 Channel)

SYMBOL NUMBER	PART NUMBER	DESCRIPTION
C1	287620-227	Capacitor, 2.2 ufd
C2	10-291759-473	Capacitor, .047 ufd
C3-C14	263343-156	Capacitor, 15 ufd
C15, C16	20-263695-156	Capacitor, 15 ufd
C17	263343-156	Capacitor, 15 ufd
C18-C77	288755-104	Capacitor, .1 ufd
C206	288755-104	Capacitor, .1 ufd
C306	288755-104	Capacitor, .1 ufd
C406	288755-104	Capacitor, .1 ufd
C506	288755-104	Capacitor, .1 ufd
C606	288755-104	Capacitor, .1 ufd
C706	288755-104	Capacitor, .1 ufd
C806	288755-104	Capacitor, .1 ufd
C202	288755-104	Capacitor, .1 ufd
C302	288755-104	Capacitor, .1 ufd
C402	288755-104	Capacitor, .1 ufd
C502	288755-104	Capacitor, .1 ufd
C602	288755-104	Capacitor, .1 ufd
C702	288755-104	Capacitor, .1 ufd
C802	288755-104	Capacitor, .1 ufd
C204	288755-104	Capacitor, .1 ufd
C304	288755-104	Capacitor, .1 ufd
C404	288755-104	Capacitor, .1 ufd
C504	288755-104	Capacitor, .1 ufd
C604	288755-104	Capacitor, .1 ufd
C704	288755-104	Capacitor, .1 ufd
C804	288755-104	Capacitor, .1 ufd
C201	288755-104	Capacitor, .1 ufd
C301	288755-104	Capacitor, .1 ufd
C401	288755-104	Capacitor, .1 ufd
C501	288755-104	Capacitor, .1 ufd
C601	288755-104	Capacitor, .1 ufd
C701	288755-104	Capacitor, .1 ufd
C801	288755-104	Capacitor, .1 ufd
C203	288755-104	Capacitor, .1 ufd
C303	288755-104	Capacitor, .1 ufd
C403	288755-104	Capacitor, .1 ufd
C503	288755-104	Capacitor, .1 ufd
C603	288755-104	Capacitor, .1 ufd
C703	288755-104	Capacitor, .1 ufd

MULTI-CHANNEL WAVEFORM RECORDER
BOARD ASSEMBLY, DIGITAL - 896236-1
FIGURE 6-8 (6 Channel) (Continued)

SYMBOL NUMBER	PART NUMBER	DESCRIPTION
C803	288755-104	Capacitor, .1 ufd
C205	288755-104	Capacitor, .1 ufd
C305	288755-104	Capacitor, .1 ufd
C405	288755-104	Capacitor, .1 ufd
C505	288755-104	Capacitor, .1 ufd
C605	288755-104	Capacitor, .1 ufd
C705	288755-104	Capacitor, .1 ufd
C805	288755-104	Capacitor, .1 ufd
C259	288755-104	Capacitor, .1 ufd
C359	288755-104	Capacitor, .1 ufd
C459	288755-104	Capacitor, .1 ufd
C559	288755-104	Capacitor, .1 ufd
C659	288755-104	Capacitor, .1 ufd
C759	288755-104	Capacitor, .1 ufd
C859	288755-104	Capacitor, .1 ufd
C260	288755-104	Capacitor, .1 ufd
C360	288755-104	Capacitor, .1 ufd
C460	288755-104	Capacitor, .1 ufd
C560	288755-104	Capacitor, .1 ufd
C660	288755-104	Capacitor, .1 ufd
C760	288755-104	Capacitor, .1 ufd
C860	288755-104	Capacitor, .1 ufd
CR1	269256-7	Diode, 1N4007
CR2, CR3	280440	Diode, 1N4148
J3, J4	296508-9	Connector, Male
J5	296509-9	Connector, Female
K1	293735-6	Relay, Dry Reed
K2, K3	296507	Relay, DIP
R101	R1-284694-25000	Resistor, 1/4W, .1%, 2.5 Kohm
R201	R1-284694-25000	Resistor, 1/4W, .1%, 2.5 Kohm
R301	R1-284694-25000	Resistor, 1/4W, .1%, 2.5 Kohm
R401	R1-284694-25000	Resistor, 1/4W, .1%, 2.5 Kohm
R501	R1-284694-25000	Resistor, 1/4W, .1%, 2.5 Kohm
R601	R1-284694-25000	Resistor, 1/4W, .1%, 2.5 Kohm
R701	R1-284694-25000	Resistor, 1/4W, .1%, 2.5 Kohm
R202	R1-284694-25000	Resistor, 1/4W, .1%, 2.5 Kohm
R302	R1-284694-25000	Resistor, 1/4W, .1%, 2.5 Kohm
R402	R1-284694-25000	Resistor, 1/4W, .1%, 2.5 Kohm
R502	R1-284694-25000	Resistor, 1/4W, .1%, 2.5 Kohm
R602	R1-284694-25000	Resistor, 1/4W, .1%, 2.5 Kohm

MULTI-CHANNEL WAVEFORM RECORDER
BOARD ASSEMBLY, DIGITAL - 896236-1
FIGURE 6-8 (6 Channel) (Continued)

SYMBOL NUMBER	PART NUMBER	DESCRIPTION
R702	R1-284694-25000	Resistor, 1/4W, .1%, 2.5 Kohm
R203, R204	R1-288308-15000	Resistor, 1/4W, .1%, 1.5 Kohm
R303, R304	R1-288308-15000	Resistor, 1/4W, .1%, 1.5 Kohm
R403, R404	R1-288308-15000	Resistor, 1/4W, .1%, 1.5 Kohm
R503, R504	R1-288308-15000	Resistor, 1/4W, .1%, 1.5 Kohm
R603, R604	R1-288308-15000	Resistor, 1/4W, .1%, 1.5 Kohm
R703, R704	R1-288308-15000	Resistor, 1/4W, .1%, 1.5 Kohm
R205	R1-288308-12500	Resistor, 1/4W, .1%, 1.25 Kohm
R305, R405	R1-288308-12500	Resistor, 1/4W, .1%, 1.25 Kohm
R505, R605	R1-288308-12500	Resistor, 1/4W, .1%, 1.25 Kohm
R705, R805	R1-288308-12500	Resistor, 1/4W, .1%, 1.25 Kohm
R306, R406	R1-288308-12500	Resistor, 1/4W, .1%, 1.25 Kohm
R506, R606	R1-288308-12500	Resistor, 1/4W, .1%, 1.25 Kohm
R706, R806	R1-288308-12500	Resistor, 1/4W, .1%, 1.25 Kohm
R207	1-281851-25003	Resistor, 1/8W, 1%, 2.5 Mohm
R307	1-281851-25003	Resistor, 1/8W, 1%, 2.5 Mohm
R407	1-281851-25003	Resistor, 1/8W, 1%, 2.5 Mohm
R507	1-281851-25003	Resistor, 1/8W, 1%, 2.5 Mohm
R607	1-281851-25003	Resistor, 1/8W, 1%, 2.5 Mohm
R707	1-281851-25003	Resistor, 1/8W, 1%, 2.5 Mohm
R807	1-281851-25003	Resistor, 1/8W, 1%, 2.5 Mohm
R209	1-296265-750R0	Resistor, .1%, 750 ohm
R309	1-296265-750R0	Resistor, .1%, 750 ohm
R409	1-296265-750R0	Resistor, .1%, 750 ohm
R509	1-296265-750R0	Resistor, .1%, 750 ohm
R609	1-296265-750R0	Resistor, .1%, 750 ohm
R709	1-296265-750R0	Resistor, .1%, 750 ohm
R208	1-296265-750R0	Resistor, .1%, 750 ohm
R308	1-296265-750R0	Resistor, .1%, 750 ohm
R408	1-296265-750R0	Resistor, .1%, 750 ohm
R508	1-296265-750R0	Resistor, .1%, 750 ohm
R608	1-296265-750R0	Resistor, .1%, 750 ohm
R708	1-296265-750R0	Resistor, .1%, 750 ohm
R210	5-241111-271	Resistor, 10 Kohm
R310	5-241111-271	Resistor, 10 Kohm
R410	5-241111-271	Resistor, 10 Kohm
R510	5-241111-271	Resistor, 10 Kohm
R610	5-241111-271	Resistor, 10 Kohm
R710	5-241111-271	Resistor, 10 Kohm
R1	269085-203	Resistor, Variable, 20 Kohm

MULTI-CHANNEL WAVEFORM RECORDER
BOARD ASSEMBLY, DIGITAL - 896236-1
FIGURE 6-8 (6 Channel) (Continued)

SYMBOL NUMBER	PART NUMBER	DESCRIPTION
R2-R5	5-241111-271	Resistor, 270 ohm
R6-R9	5-241111-154	Resistor, 150 Kohm
R11	5-241111-332	Resistor, 3.3 Kohm
RN1-RN6	296511-222	Resistor Network
R12	5-241111-333	Resistor, 33 Kohm
S1	295642-1	Switch, DIP
S2	296270	Switch, Slide, 3 Position
S3	289742	Switch, SPDT
S4	286142-8	Switch, DIP, 8 Position
J5	296278-1	Socket, Rt. Angle
J200	296510-8	Connector
J300	296510-8	Connector
J400	296510-8	Connector
J500	296510-8	Connector
J600	296510-8	Connector
J700	296510-8	Connector
J100	287491-8	Connector
J200	287491-8	Connector
J300	287491-8	Connector
J400	287491-8	Connector
J500	287491-8	Connector
J600	287491-8	Connector
J700	287491-8	Connector
J800	287491-8	Connector
J100	4-287490	Contact
J200	4-287490	Contact
J300	4-287490	Contact
J400	4-287490	Contact
J500	4-287490	Contact
J600	4-287490	Contact
J700	4-287490	Contact
J800	4-287490	Contact
J6	296510-24	Connector
U1	294662	I.C., REF-02
U2	292719	I.C., OP11EY
U3, U44	290169-244	I.C., 74LS244
U204	290169-244	I.C., 74LS244
U304	290169-244	I.C., 74LS244
U404	290169-244	I.C., 74LS244
U504	290169-244	I.C., 74LS244

MULTI-CHANNEL WAVEFORM RECORDER
BOARD ASSEMBLY, DIGITAL - 896236-1
FIGURE 6-8 (6 Channel) (Continued)

SYMBOL NUMBER	PART NUMBER	DESCRIPTION
U604	290169-244	I.C., 74LS244
U704	290169-244	I.C., 74LS244
U4	290169-14	I.C., 74LS14
U5, U7	290169-74	I.C., 74LS74
U11, U18	290169-74	I.C., 74LS74
U23, U24	290169-74	I.C., 74LS74
U37, U39	290169-74	I.C., 74LS74
U41, U43	290169-74	I.C., 74LS74
U46, U48	290169-74	I.C., 74LS74
U6, U8	290169-02	I.C., 74LS02
U17, U38	290169-02	I.C., 74LS02
U9	290169-112	I.C., 74LS112
U10, U14	290169-161	I.C., 74LS161
U25, U40	290169-161	I.C., 74LS161
U53, U58	290169-161	I.C., 74LS161
U59, U60	290169-161	I.C., 74LS161
U63	290169-161	I.C., 74LS161
U12, U32	281105	I.C., 7474
U13	290169-27	I.C., 74LS27
U15	291235-132	I.C., 74L32
U16	290169-11	I.C., 74LS11
U19, U22	290169-08	I.C., 74LS08
U27, U29	290169-08	I.C., 74LS08
U51, U54	290169-08	I.C., 74LS08
U20	290169-138	I.C., 74LS138
U21, U36	290169-32	I.C., 74LS32
U26	290169-109	I.C., 74LS109
U28, U50	290169-04	I.C., 74LS04
U64, U65	290169-04	I.C., 74LS04
U66	290169-04	I.C., 74LS04
U30	290169-175	I.C., 74LS175
U31	296264-2	I.C., PAL 1677
U33	290169-12	I.C., 74LS12
U34	291069-03	I.C., 74LS03
U35, U42	290169-157	I.C., 74LS157
U47	290169-00	I.C., 74LS00
U49, U52	296512	I.C., 75472
U55-U57	287735	I.C., 74150
U67	290169-273	I.C., 74LS273
U206	290169-273	I.C., 74LS273

MULTI-CHANNEL WAVEFORM RECORDER
BOARD ASSEMBLY, DIGITAL - 896236-1
FIGURE 6-8 (6 Channel) (Continued)

SYMBOL NUMBER	PART NUMBER	DESCRIPTION
U306	290169-273	I.C., 74LS273
U406	290169-273	I.C., 74LS273
U506	290169-273	I.C., 74LS273
U606	290169-273	I.C., 74LS273
U706	290169-273	I.C., 74LS273
U68-U71	285589-1	I.C., 4N25
U208	292885	I.C., LF351N
U308	292885	I.C., LF351N
U408	292885	I.C., LF351N
U508	292885	I.C., LF351N
U608	292885	I.C., LF351N
U708	292885	I.C., LF351N
U205	290169-534	I.C., 74LS534
U305	290169-534	I.C., 74LS534
U405	290169-534	I.C., 74LS534
U505	290169-534	I.C., 74LS534
U605	290169-534	I.C., 74LS534
U705	290169-534	I.C., 74LS534
U207	296267	I.C., DAC-08
U307	296267	I.C., DAC-08
U407	296267	I.C., DAC-08
U507	296267	I.C., DAC-08
U607	296267	I.C., DAC-08
U707	296267	I.C., DAC-08
U202	296267	I.C., DAC-08
U302	296267	I.C., DAC-08
U402	296267	I.C., DAC-08
U502	296267	I.C., DAC-08
U602	296267	I.C., DAC-08
U702	296267	I.C., DAC-08
U203	296263	I.C., AM2502
U303	296263	I.C., AM2502
U403	296263	I.C., AM2502
U503	296263	I.C., AM2502
U603	296263	I.C., AM2502
U703	296263	I.C., AM2502
U201	296269	I.C., LM361
U301	296269	I.C., LM361
U401	296269	I.C., LM361
U501	296269	I.C., LM361

MULTI-CHANNEL WAVEFORM RECORDER
BOARD ASSEMBLY, DIGITAL - 896236-1
FIGURE 6-8 (6 Channel) (Continued)

SYMBOL NUMBER	PART NUMBER	DESCRIPTION
U601	296269	I.C., LM361
U701	296269	I.C., LM361
M200	296263	I.C., 4016-1 RAM
M300	296263	I.C., 4016-1 RAM
M400	296263	I.C., 4016-1 RAM
M600	296263	I.C., 4016-1 RAM
M500	296263	I.C., 4016-1 RAM
M700	296263	I.C., 4016-1 RAM
M201	296263	I.C., 4016-1 RAM
M301	296263	I.C., 4016-1 RAM
M401	296263	I.C., 4016-1 RAM
M501	296263	I.C., 4016-1 RAM
M601	296263	I.C., 4016-1 RAM
M701	296263	I.C., 4016-1 RAM

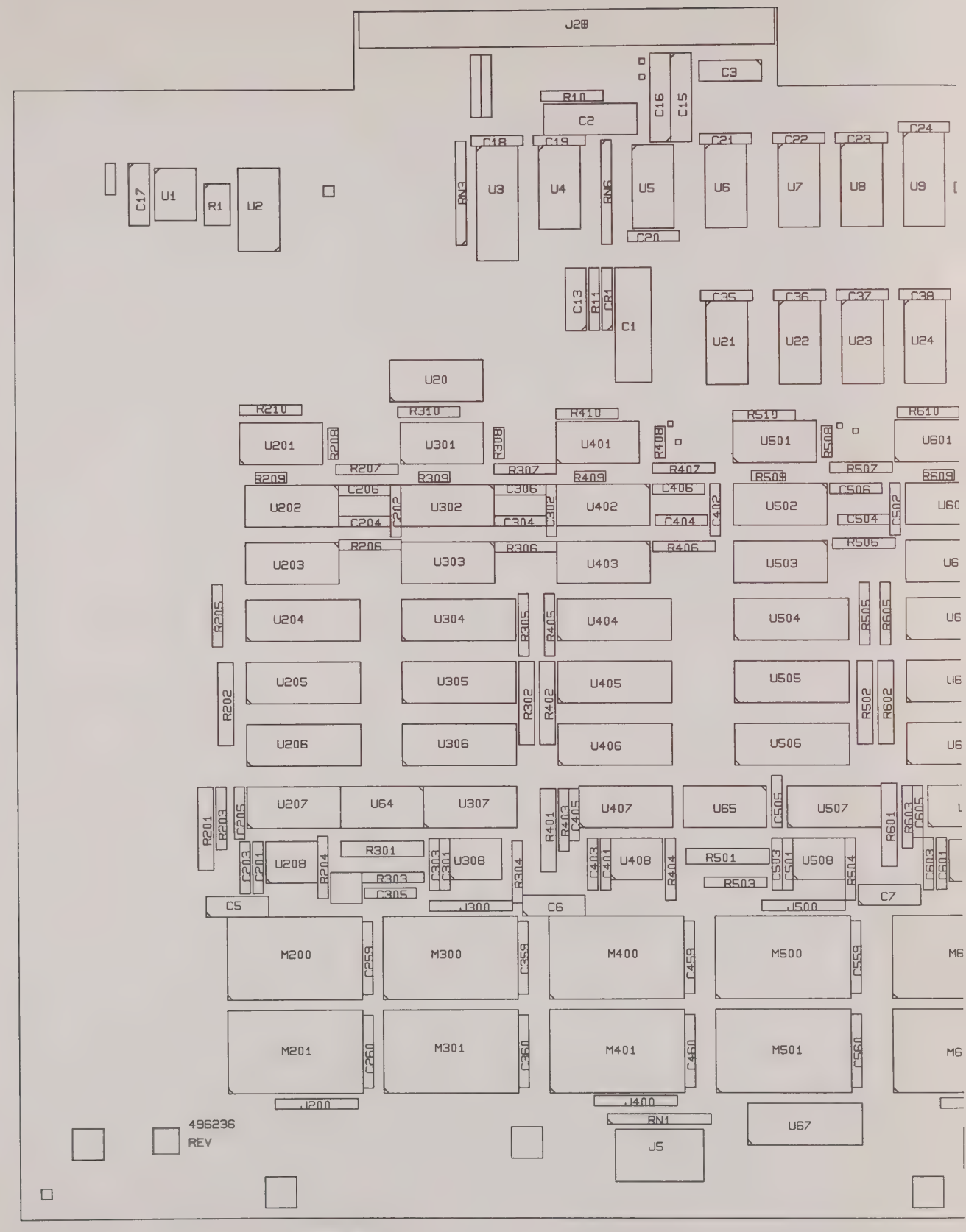

496236 REV. F

FIGURE 6-8 BOARD ASSEMBLY, DIGIT

J1
C4
S3
C25
C26
C27
C28
C29
C30
C31
C32
C33
C34
RN5
U10
U11
U12
U13
U14
U15
U16
C10
U17
U18
U19
C39
C40
C41
C42
C43
C44
C45
C46
C47
C48
U25
C12
RN4
U26
U27
U28
U29
U30
U31
U32
U33
U34
R710
U701
R608
R708
R607
R709
R707
C49
C50
C51
C52
C53
U35
U36
U37
U38
U39
C606
C602
U702
C706
C702
C604
C704
R606
R706
U703
C55
C56
C57
C54
U41
U42
U43
U40
RN2
C11
U704
R705
C58
C59
C60
U46
U47
U48
U705
R702
C61
C62
U44
U45
C63
C64
C65
U706
U49
U50
C14
U51
U52
U607
R701
R703
C705
U707
U66
C68
C69
C70
U608
R604
C703
C701
U708
R704
C66
C67
U53
U54
U55
U56
U57
J700
C8
C71
M700
C659
C759
J6
U58
S1
C72
C73
C74
C75
U60
U61
U62
U63
M701
C660
C760
C76
R2
C9
CR3
CR2
U59
U71
K3
K1
K2
J600
U68
U69
U70
C77
R12
R7
U72
R4
R3
J3
R5
R6
R8
S2
R9
J4

MULTI-CHANNEL WAVEFORM RECORDER
BOARD ASSEMBLY, DIGITAL - 896236-2
FIGURE 6-9 (4 Channel)

SYMBOL NUMBER	PART NUMBER	DESCRIPTION
C1	287620-227	Capacitor, 2.2 ufd
C2	10-291759-473	Capacitor, .047 ufd
C3-C14	263343-156	Capacitor, 15 ufd
C15, C16	20-263695-156	Capacitor, 15 ufd
C17	263343-156	Capacitor, 15 ufd
C18-C77	288755-104	Capacitor, .1 ufd
C106	288755-104	Capacitor, .1 ufd
C306	288755-104	Capacitor, .1 ufd
C506	288755-104	Capacitor, .1 ufd
C606	288755-104	Capacitor, .1 ufd
C806	288755-104	Capacitor, .1 ufd
C102	288755-104	Capacitor, .1 ufd
C302	288755-104	Capacitor, .1 ufd
C602	288755-104	Capacitor, .1 ufd
C702	288755-104	Capacitor, .1 ufd
C802	288755-104	Capacitor, .1 ufd
C104	288755-104	Capacitor, .1 ufd
C304	288755-104	Capacitor, .1 ufd
C604	288755-104	Capacitor, .1 ufd
C804	288755-104	Capacitor, .1 ufd
C101	288755-104	Capacitor, .1 ufd
C301	288755-104	Capacitor, .1 ufd
C601	288755-104	Capacitor, .1 ufd
C801	288755-104	Capacitor, .1 ufd
C103	288755-104	Capacitor, .1 ufd
C303	288755-104	Capacitor, .1 ufd
C603	288755-104	Capacitor, .1 ufd
C803	288755-104	Capacitor, .1 ufd
C105	288755-104	Capacitor, .1 ufd
C305	288755-104	Capacitor, .1 ufd
C605	288755-104	Capacitor, .1 ufd
C805	288755-104	Capacitor, .1 ufd
C159	288755-104	Capacitor, .1 ufd
C359	288755-104	Capacitor, .1 ufd
C659	288755-104	Capacitor, .1 ufd

SYMBOL NUMBER	PART NUMBER	DESCRIPTION
C303	288755-104	Capacitor, .1 ufd
C603	288755-104	Capacitor, .1 ufd
C803	288755-104	Capacitor, .1 ufd
C105	288755-104	Capacitor, .1 ufd
C305	288755-104	Capacitor, .1 ufd
C605	288755-104	Capacitor, .1 ufd
C805	288755-104	Capacitor, .1 ufd
C159	288755-104	Capacitor, .1 ufd
C359	288755-104	Capacitor, .1 ufd
C659	288755-104	Capacitor, .1 ufd
C859	288755-104	Capacitor, .1 ufd
C160	288755-104	Capacitor, .1 ufd
C360	288755-104	Capacitor, .1 ufd
C660	288755-104	Capacitor, .1 ufd
C860	288755-104	Capacitor, .1 ufd
CR1	269256-7	Diode, 1N4007
CR2, CR3	280440	Diode, 1N4148
J3, J4	296508-9	Connector, Male
J5	296509-9	Connector, Female
K1	293735-6	Relay, Dry Reed
K2, K3	296507	Relay, DIP
R101	R1-284694-25000	Resistor, 1/4W, .1%, 2.5 Kohm
R301	R1-284694-25000	Resistor, 1/4W, .1%, 2.5 Kohm
R601	R1-284694-25000	Resistor, 1/4W, .1%, 2.5 Kohm
R801	R1-284694-25000	Resistor, 1/4W, .1%, 2.5 Kohm
R102	R1-284694-25000	Resistor, 1/4W, .1%, 2.5 Kohm
R302	R1-284694-25000	Resistor, 1/4W, .1%, 2.5 Kohm
R602	R1-284694-25000	Resistor, 1/4W, .1%, 2.5 Kohm
R802	R1-284694-25000	Resistor, 1/4W, .1%, 2.5 Kohm
R103, R104	R1-288308-15000	Resistor, 1/4W, .1%, 1.5 Kohm
R303, R304	R1-288308-15000	Resistor, 1/4W, .1%, 1.5 Kohm
R603, R604	R1-288308-15000	Resistor, 1/4W, .1%, 1.5 Kohm
R803, R804	R1-288308-15000	Resistor, 1/4W, .1%, 1.5 Kohm
R105, R205	R1-288308-12500	Resistor, 1/4W, .1%, 1.25 Kohm
R305, R405	R1-288308-12500	Resistor, 1/4W, .1%, 1.25 Kohm

MULTI-CHANNEL WAVEFORM RECORDER
BOARD ASSEMBLY, DIGITAL - 896236-2
FIGURE 6-9 (4 Channel) (Continued)

SYMBOL NUMBER	PART NUMBER	DESCRIPTION
R106	R1-288308-12500	Resistor, 1/4W, .1%, 1.25 Kohm
R306	R1-288308-12500	Resistor, 1/4W, .1%, 1.25 Kohm
R606	R1-288308-12500	Resistor, 1/4W, .1%, 1.25 Kohm
R806	R1-288308-12500	Resistor, 1/4W, .1%, 1.25 Kohm
R107	1-281851-25003	Resistor, 1/8W, 1%, 2.5 Mohm
R307	1-281851-25003	Resistor, 1/8W, 1%, 2.5 Mohm
R607	1-281851-25003	Resistor, 1/8W, 1%, 2.5 Mohm
R807	1-281851-25003	Resistor, 1/8W, 1%, 2.5 Mohm
R109	1-296265-750R0	Resistor, .1%, 750 ohm
R309	1-296265-750R0	Resistor, .1%, 750 ohm
R609	1-296265-750R0	Resistor, .1%, 750 ohm
R809	1-296265-750R0	Resistor, .1%, 750 ohm
R108	1-296265-750R0	Resistor, .1%, 750 ohm
R308	1-296265-750R0	Resistor, .1%, 750 ohm
R608	1-296265-750R0	Resistor, .1%, 750 ohm
R808	1-296265-750R0	Resistor, .1%, 750 ohm
R110	5-241111-271	Resistor, 10 Kohm
R310	5-241111-271	Resistor, 10 Kohm
R610	5-241111-271	Resistor, 10 Kohm
R810	5-241111-271	Resistor, 10 Kohm
R1	269085-203	Resistor, Variable, 20 Kohm
R2-R5	5-241111-271	Resistor, 270 ohm
R6-R9	5-241111-154	Resistor, 150 Kohm
R11	5-241111-332	Resistor, 3.3 Kohm
RN1-RN6	296511-222	Resistor Network
R12	5-241111-333	Resistor, 33 Kohm
S1	295642-1	Switch, DIP
S2	296270	Switch, Slide, 3 Position
S3	289742	Switch, SPDT
S4	286142-8	Switch, DIP, 8 Position
J5	296278-1	Socket, Rt. Angle
J100	296510-8	Connector
J300	296510-8	Connector
J500	296510-8	Connector
J600	296510-8	Connector

MULTI-CHANNEL WAVEFORM RECORDER
BOARD ASSEMBLY, DIGITAL - 896236-2
FIGURE 6-9 (4 Channel) (Continued)

SYMBOL NUMBER	PART NUMBER	DESCRIPTION
J700	296510-8	Connector
J800	296510-8	Connector
J100	287491-8	Connector
J200	287491-8	Connector
J300	287491-8	Connector
J400	287491-8	Connector
J500	287491-8	Connector
J600	287491-8	Connector
J700	287491-8	Connector
J800	287491-8	Connector
J100	4-287490	Contact
J200	4-287490	Contact
J300	4-287490	Contact
J400	4-287490	Contact
J500	4-287490	Contact
J600	4-287490	Contact
J700	4-287490	Contact
J800	4-287490	Contact
J6	296510-24	Connector
U1	294662	I.C., REF-02
U2	292719	I.C., OP11EY
U3, U44	290169-244	I.C., 74LS244
U104	290169-244	I.C., 74LS244
U304	290169-244	I.C., 74LS244
U604	290169-244	I.C., 74LS244
U804	290169-244	I.C., 74LS244
U4	290169-14	I.C., 74LS14
U5, U7	290169-74	I.C., 74LS74
U11, U18	290169-74	I.C., 74LS74
U23, U24	290169-74	I.C., 74LS74
U37, U39	290169-74	I.C., 74LS74
U41, U43	290169-74	I.C., 74LS74
U46, U48	290169-74	I.C., 74LS74
U6, U8	290169-02	I.C., 74LS02
U17, U38	290169-02	I.C., 74LS02

MULTI-CHANNEL WAVEFORM RECORDER
BOARD ASSEMBLY, DIGITAL - 896236-2
FIGURE 6-9 (4 Channel) (Continued)

SYMBOL NUMBER	PART NUMBER	DESCRIPTION
U9	290169-112	I.C., 74LS112
U10, U14	290169-161	I.C., 74LS161
U25, U40	290169-161	I.C., 74LS161
U53, U58	290169-161	I.C., 74LS161
U59, U60	290169-161	I.C., 74LS161
U63	290169-161	I.C., 74LS161
U12, U32	281105	I.C., 7474
U13	290169-27	I.C., 74LS27
U15	291235-132	I.C., 74L32
U16	290169-11	I.C., 74LS11
U19, U22	290169-08	I.C., 74LS08
U27, U29	290169-08	I.C., 74LS08
U51, U54	290169-08	I.C., 74LS08
U20	290169-138	I.C., 74LS138
U21, U36	290169-32	I.C., 74LS32
U26	290169-109	I.C., 74LS109
U28, U50	290169-04	I.C., 74LS04
U64, U65	290169-04	I.C., 74LS04
U66	290169-04	I.C., 74LS04
U30	290169-175	I.C., 74LS175
U31	296264-2	I.C., PAL 1677
U33	290169-12	I.C., 74LS12
U34	291069-03	I.C., 74LS03
U35, U42	290169-157	I.C., 74LS157
U47	290169-00	I.C., 74LS00
U49, U52	296512	I.C., 75472
U55-U57	287735	I.C., 74150
U67	290169-273	I.C., 74LS273
U106	290169-273	I.C., 74LS273
U306	290169-273	I.C., 74LS273
U606	290169-273	I.C., 74LS273
U806	290169-273	I.C., 74LS273
U68-U71	285589-1	I.C., 4N25
U108	292885	I.C., LF351N
U308	292885	I.C., LF351N

MULTI-CHANNEL WAVEFORM RECORDER
BOARD ASSEMBLY, DIGITAL - 896236-2
FIGURE 6-9 (4 Channel) (Continued)

SYMBOL NUMBER	PART NUMBER	DESCRIPTION
U608	292885	I.C., LF351N
U808	292885	I.C., LF351N
U105	290169-534	I.C., 74LS534
U305	290169-534	I.C., 74LS534
U605	290169-534	I.C., 74LS534
U805	290169-534	I.C., 74LS534
U107	296267	I.C., DAC-08
U207	296267	I.C., DAC-08
U307	296267	I.C., DAC-08
U607	296267	I.C., DAC-08
U807	296267	I.C., DAC-08
U102	296267	I.C., DAC-08
U302	296267	I.C., DAC-08
U602	296267	I.C., DAC-08
U802	296267	I.C., DAC-08
U103	296263	I.C., AM2502
U303	296263	I.C., AM2502
U603	296263	I.C., AM2502
U803	296263	I.C., AM2502
U101	296269	I.C., LM361
U301	296269	I.C., LM361
U601	296269	I.C., LM361
U801	296269	I.C., LM361
M100	296263	I.C., 4016-1 RAM
M300	296263	I.C., 4016-1 RAM
M600	296263	I.C., 4016-1 RAM
M800	296263	I.C., 4016-1 RAM
M101	296263	I.C., 4016-1 RAM
M301	296263	I.C., 4016-1 RAM
M601	296263	I.C., 4016-1 RAM
M801	296263	I.C., 4016-1 RAM

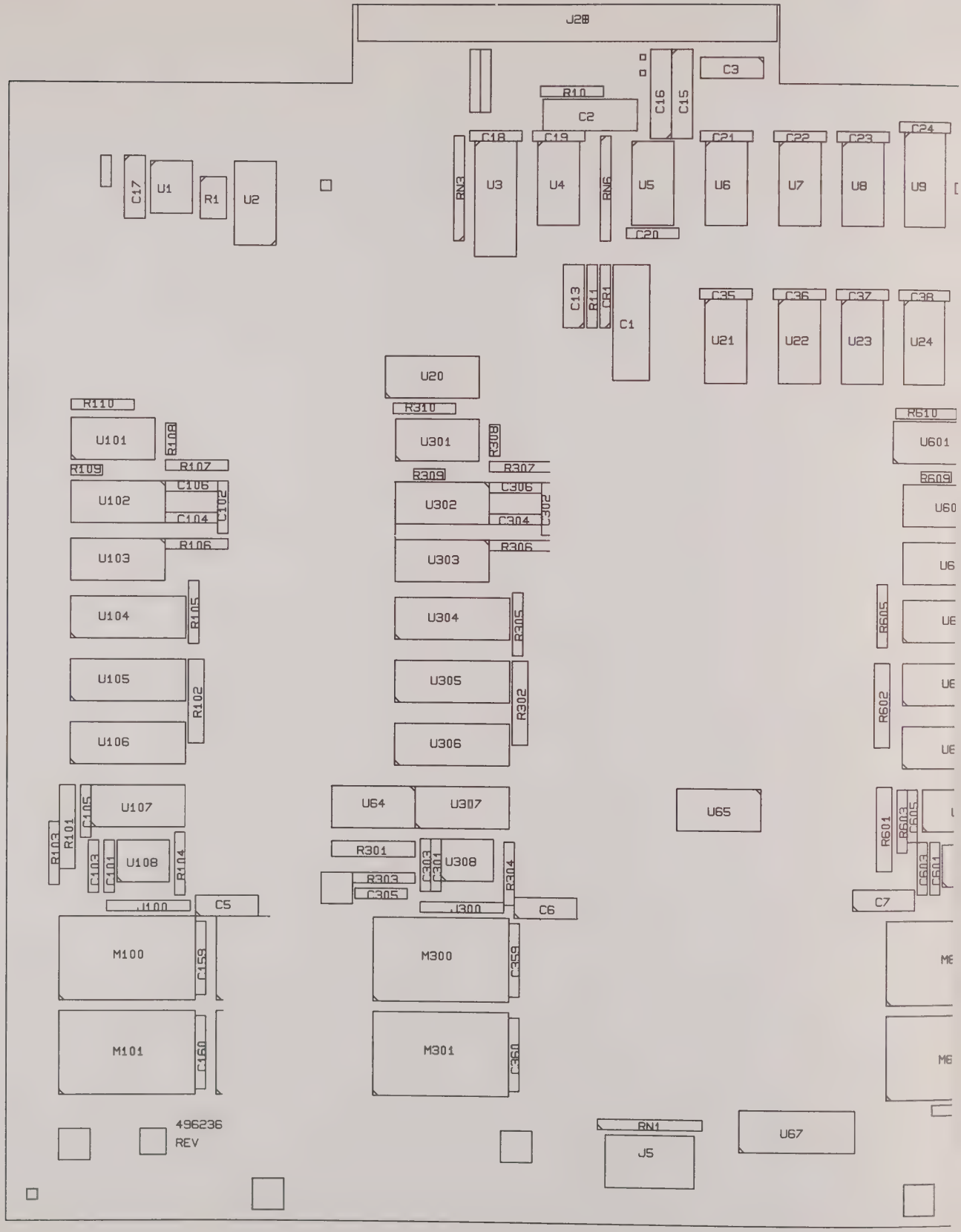

FIGURE 6-9 BOARD ASSEMBLY, DIGIT

J1
C4
S3
RN5
C25
C26
C27
C28
C29
C30
C31
C32
C33
C34
U10
U11
U12
U13
U14
U15
U16
C10
U17
U18
U19
C39
C40
C41
C42
C43
C44
C45
C46
C47
C48
U25
C12
RN4
U26
U27
U28
U29
U30
U31
U32
U33
U34
R810
C49
C51
C52
C53
U801
R808
U35
C50
U37
U38
U39
R608
R607
R809
U36
C606
C602
C604
U802
R807
C802
C804
C806
R806
C55
C56
C57
R606
U803
C54
U41
U42
U43
U40
R805
U804
RN2
C11
C58
C59
C60
U46
U47
U48
U805
C61
C62
R802
U44
U45
C63
C64
C65
U806
U49
U50
C14
U51
U52
U66
C805
U807
C68
C69
C70
C66
C67
U608
R604
R801
C803
C801
U808
R804
U53
U54
U55
U56
U57
R803
C8
J800
C71
M800
C859
J6
U58
S1
C72
C73
C74
C75
U60
U61
U62
U63
C659
M801
C860
C76
R2
C9
C660
U59
CR3
CR2
U71
K3
K1
K2
J600
U69
U70
U68
C77
R12
R7
R6
R8
U72
R4
R3
J3
R5
R9
J4
S2

MULTI-CHANNEL WAVEFORM RECORDER
BOARD ASSEMBLY, FRONT PANEL - 896233
FIGURE 6-10 (8 Channel)

SYMBOL NUMBER	PART NUMBER	DESCRIPTION
C1	290303-155	Capacitor, 1.5 ufd
C2	5-288757-101	Capacitor, 100 pf
C3	288755-104	Capacitor, .1 ufd
C4	288755-103	Capacitor, .01 ufd
C5	288755-473	Capacitor, .047 ufd
C6	290303-224	Capacitor, .22 ufd
C7	263343-156	Capacitor, 15 ufd
C8	288755-104	Capacitor, .10 ufd
C9, C10	288755-104	Capacitor, .1 ufd
C11, C12	288755-104	Capacitor, .1 ufd
C13, C14	288755-104	Capacitor, .1 ufd
C15, C16	288755-104	Capacitor, .1 ufd
C17, C18	288755-104	Capacitor, .1 ufd
C19, C20	288755-104	Capacitor, .1 ufd
C21	288755-104	Capacitor, .1 ufd
C22, C23	263343-156	Capacitor, 15 ufd
C24, C25	266343-156	Capacitor, 15 ufd
C26, C27	262585-106	Capacitor, 10 ufd
C101	5-231854-200	Capacitor, 20 pf
C201	5-231854-200	Capacitor, 20 pf
C301	5-231854-200	Capacitor, 20 pf
C401	5-231854-200	Capacitor, 20 pf
C501	5-231854-200	Capacitor, 20 pf
C601	5-231854-200	Capacitor, 20 pf
C701	5-231854-200	Capacitor, 20 pf
C801	5-231854-200	Capacitor, 20 pf
C102	296379-1	Capacitor, Variable, 3-22 pf
C202	296379-1	Capacitor, Variable, 3-22 pf
C302	296379-1	Capacitor, Variable, 3-22 pf
C402	296379-1	Capacitor, Variable, 3-22 pf
C502	296379-1	Capacitor, Variable, 3-22 pf
C602	296379-1	Capacitor, Variable, 3-22 pf
C702	296379-1	Capacitor, Variable, 3-22 pf
C802	296379-1	Capacitor, Variable, 3-22 pf
C104	20-296365-823	Capacitor, .082 ufd
C204	20-296365-823	Capacitor, .082 ufd
C304	20-296365-823	Capacitor, .082 ufd
C404	20-296365-823	Capacitor, .082 ufd
C504	20-296365-823	Capacitor, .082 ufd
C604	20-296365-823	Capacitor, .082 ufd

MULTI-CHANNEL WAVEFORM RECORDER
BOARD ASSEMBLY, FRONT PANEL - 896233
FIGURE 6-10 (8 Channel) (Continued)

SYMBOL NUMBER	PART NUMBER	DESCRIPTION
C704	20-296365-823	Capacitor, .082 ufd
C804	20-296365-823	Capacitor, .082 ufd
C106	5-231854-100	Capacitor, 10 pf
C206	5-231854-100	Capacitor, 10 pf
C306	5-231854-100	Capacitor, 10 pf
C406	5-231854-100	Capacitor, 10 pf
C506	5-231854-100	Capacitor, 10 pf
C606	5-231854-100	Capacitor, 10 pf
C706	5-231854-100	Capacitor, 10 pf
C806	5-231854-100	Capacitor, 10 pf
C103	294678-102	Capacitor, 1000 pf
C203	294678-102	Capacitor, 1000 pf
C303	294678-102	Capacitor, 1000 pf
C403	294678-102	Capacitor, 1000 pf
C503	294678-102	Capacitor, 1000 pf
C603	294678-102	Capacitor, 1000 pf
C703	294678-102	Capacitor, 1000 pf
C803	294678-102	Capacitor, 1000 pf
D1, D2	296602-2	Diode
D3	296602-2	Diode
D4	296602-1	Diode
D5	296602-1	Diode
D6	296602-1	Diode
D7	296602-2	Diode
D8	296602-2	Diode
D9, D10	289898-1	7 Segment Display, MAN4610A
D11	289898-2	7 Segment Display, ±1 Overflow MAN4630A
D12	289662	Diode
D13	241133	Diode
D101	296602-1	Diode
D201	296602-1	Diode
D301	296602-1	Diode
D401	296602-1	Diode
D501	296602-1	Diode
D601	296602-1	Diode
D701	296602-1	Diode
D801	296602-1	Diode
D102	296602-3	Diode
D202	296602-3	Diode
D302	296602-3	Diode

MULTI-CHANNEL WAVEFORM RECORDER
BOARD ASSEMBLY, FRONT PANEL - 896233
FIGURE 6-10 (8 Channel) (Continued)

SYMBOL NUMBER	PART NUMBER	DESCRIPTION
D402	296602-3	Diode
D502	296602-3	Diode
D602	296602-3	Diode
D702	296602-3	Diode
D802	296602-3	Diode
R1	R1-288308-10251	Resistor, 10.25 Kohm
R2, R3	R1-288308-10001	Resistor, 10 Kohm
R4, R5	R1-288308-10001	Resistor, 10 Kohm
R6, R7	R1-288308-50000	Resistor, 5 Kohm
R8, R9	R1-288308-50000	Resistor, 5 Kohm
R10	R1-288308-60000	Resistor, 6 Kohm
R11, R12	1-288308-50000	Resistor, 5 Kohm
R13	1-288308-50000	Resistor, 5 Kohm
R14	1-288308-50001	Resistor, 50 Kohm
R15, R16	1-265969-30003	Resistor, 3 Megohm
R17	R1-288308-100R0	Resistor, 100 ohm, .1%
R18	282299-503	Resistor, Variable, 50 Kohm
R19	296380	Resistor, Variable, 10 Kohm
R20	5-241111-104	Resistor, 100 Kohm
R21	R1-288308-20001	Resistor, 20 Kohm
R22	5-241111-105	Resistor, 1 Megohm
R23	5-241111-474	Resistor, 470 Kohm
R25	R1-288308-60000	Resistor, 6 Kohm
R26	R1-288308-25000	Resistor, 2.5 Kohm
R27	R1-288308-50000	Resistor, 5 Kohm
R28	282299-202	Resistor, Variable, 2 Kohm
R29	5-241111-563	Resistor, 56 Kohm
R30	5-241111-222	Resistor, 2.2 Kohm
R31	5-241111-222	Resistor, 2.2 Kohm
R32	5-241111-222	Resistor, 2.2 Kohm
R33	5-241111-222	Resistor, 2.2 Kohm
R34	5-241111-222	Resistor, 2.2 Kohm
R35	5-241111-222	Resistor, 2.2 Kohm
R36	5-241111-222	Resistor, 2.2 Kohm
R37	5-241111-222	Resistor, 2.2 Kohm
R38	5-241111-222	Resistor, 2.2 Kohm
R39	5-241111-222	Resistor, 2.2 Kohm
R40	5-241111-222	Resistor, 2.2 Kohm
R41	5-241111-222	Resistor, 2.2 Kohm
R42	5-241111-222	Resistor, 2.2 Kohm

MULTI-CHANNEL WAVEFORM RECORDER
BOARD ASSEMBLY, FRONT PANEL - 896233
FIGURE 6-10 (8 Channel) (Continued)

SYMBOL NUMBER	PART NUMBER	DESCRIPTION
R43	5-241111-222	Resistor, 2.2 Kohm
R44	5-241111-222	Resistor, 2.2 Kohm
R45	5-241111-222	Resistor, 2.2 Kohm
R46	5-241111-222	Resistor, 2.2 Kohm
R47	5-241111-222	Resistor, 2.2 Kohm
R48	5-241111-222	Resistor, 2.2 Kohm
R49	5-241111-222	Resistor, 2.2 Kohm
R50	5-241111-222	Resistor, 2.2 Kohm
R101	R1-288308-49502	Resistor, 495 Kohm
R201	R1-288308-49502	Resistor, 495 Kohm
R301	R1-288308-49502	Resistor, 495 Kohm
R401	R1-288308-49502	Resistor, 495 Kohm
R501	R1-288308-49502	Resistor, 495 Kohm
R601	R1-288308-49502	Resistor, 495 Kohm
R701	R1-288308-49502	Resistor, 495 Kohm
R801	R1-288308-49502	Resistor, 495 Kohm
R102	R1-288308-49502	Resistor, 495 Kohm
R202	R1-288308-49502	Resistor, 495 Kohm
R302	R1-288308-49502	Resistor, 495 Kohm
R402	R1-288308-49502	Resistor, 495 Kohm
R502	R1-288308-49502	Resistor, 495 Kohm
R602	R1-288308-49502	Resistor, 495 Kohm
R702	R1-288308-49502	Resistor, 495 Kohm
R802	R1-288308-49502	Resistor, 495 Kohm
R103	R1-288308-10001	Resistor, 10 Kohm
R203	R1-288308-10001	Resistor, 10 Kohm
R303	R1-288308-10001	Resistor, 10 Kohm
R403	R1-288308-10001	Resistor, 10 Kohm
R503	R1-288308-10001	Resistor, 10 Kohm
R603	R1-288308-10001	Resistor, 10 Kohm
R703	R1-288308-10001	Resistor, 10 Kohm
R803	R1-288308-10001	Resistor, 10 Kohm
R105	5-241111-222	Resistor, 2.2 Kohm
R205	5-241111-222	Resistor, 2.2 Kohm
R305	5-241111-222	Resistor, 2.2 Kohm
R405	5-241111-222	Resistor, 2.2 Kohm
R505	5-241111-222	Resistor, 2.2 Kohm
R605	5-241111-222	Resistor, 2.2 Kohm
R705	5-241111-222	Resistor, 2.2 Kohm
R805	5-241111-222	Resistor, 2.2 Kohm

MULTI-CHANNEL WAVEFORM RECORDER
BOARD ASSEMBLY, FRONT PANEL - 896233
FIGURE 6-10 (8 Channel) (Continued)

SYMBOL NUMBER	PART NUMBER	DESCRIPTION
R106	5-115558-104	Resistor, 100 Kohm
R206	5-115558-104	Resistor, 100 Kohm
R306	5-115558-104	Resistor, 100 Kohm
R406	5-115558-104	Resistor, 100 Kohm
R506	5-115558-104	Resistor, 100 Kohm
R606	5-115558-104	Resistor, 100 Kohm
R706	5-115558-104	Resistor, 100 Kohm
R806	5-115558-104	Resistor, 100 Kohm
S1	296503-5	Switch, Lever
S2		Switch
S3	296503-5	Switch, Lever
S4	296503-2	Switch, Lever
S5	296503-5	Switch, Lever
S6	296503-1	Switch, Lever
S7	296503-4	Switch, Lever
S8		Switch
S9	296501	Switch, Rotary
S10	295602	Switch, Rotary
S11	296503-5	Switch, Lever
S112	296504-1	Switch, Lever
S212	296504-1	Switch, Lever
S312	296504-1	Switch, Lever
S412	296504-1	Switch, Lever
S512	296504-1	Switch, Lever
S612	296504-1	Switch, Lever
S712	296504-1	Switch, Lever
S812	296504-1	Switch, Lever
S113	296504-2	Switch, Lever
S213	296504-2	Switch, Lever
S313	296504-2	Switch, Lever
S413	296504-2	Switch, Lever
S513	296504-2	Switch, Lever
S613	296504-2	Switch, Lever
S713	296504-2	Switch, Lever
S813	296504-2	Switch, Lever
S114	296503-3	Switch, Lever
S214	296503-3	Switch, Lever
S314	296503-3	Switch, Lever
S414	296503-3	Switch, Lever
S514	296503-3	Switch, Lever

MULTI-CHANNEL WAVEFORM RECORDER
BOARD ASSEMBLY, FRONT PANEL - 896233
FIGURE 6-10 (8 Channel) (Continued)

SYMBOL NUMBER	PART NUMBER	DESCRIPTION
S614	296503-3	Switch, Lever
S714	296503-3	Switch, Lever
S814	296503-3	Switch, Lever
U1	296120	I.C., LM319
U2	291062-3	I.C., LF374H/AT
U3	296368	I.C., TSD7107
U4	290169-85	I.C., 74LS85
U5	290169-122	I.C., 74LS122
U6	290169-283	I.C., 74LS283
U7	290169-279	I.C., 74LS279
U8	290169-148	I.C., 74LS148
U9	290169-86	I.C., 74LS86
U10	281105	I.C., MC7474
U11	291235-33	I.C., 7433
U12	290169-373	I.C., 74LS373
U13	290169-85	I.C., 74LS85
W1	267235	Jumper
W2	267235	Jumper
W3	267235	Jumper
W4	267235	Jumper
W5	267235	Jumper
W6	267235	Jumper
W7	267235	Jumper
W8	267235	Jumper
W9	267235	Jumper
W10	267235	Jumper
W11	267235	Jumper
W12	267235	Jumper

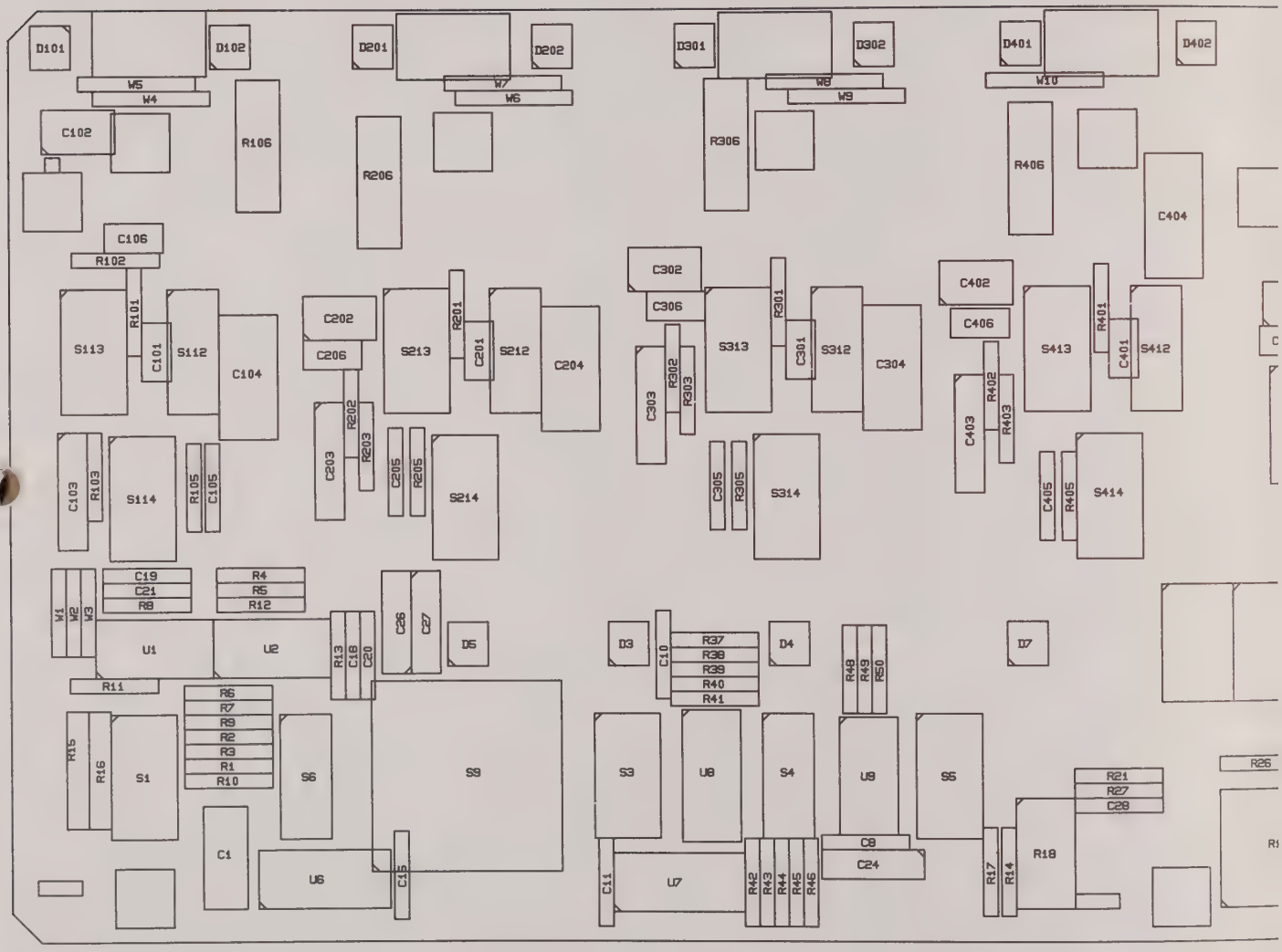

496233 REV. A

FIGURE 6-10 BOARD AS

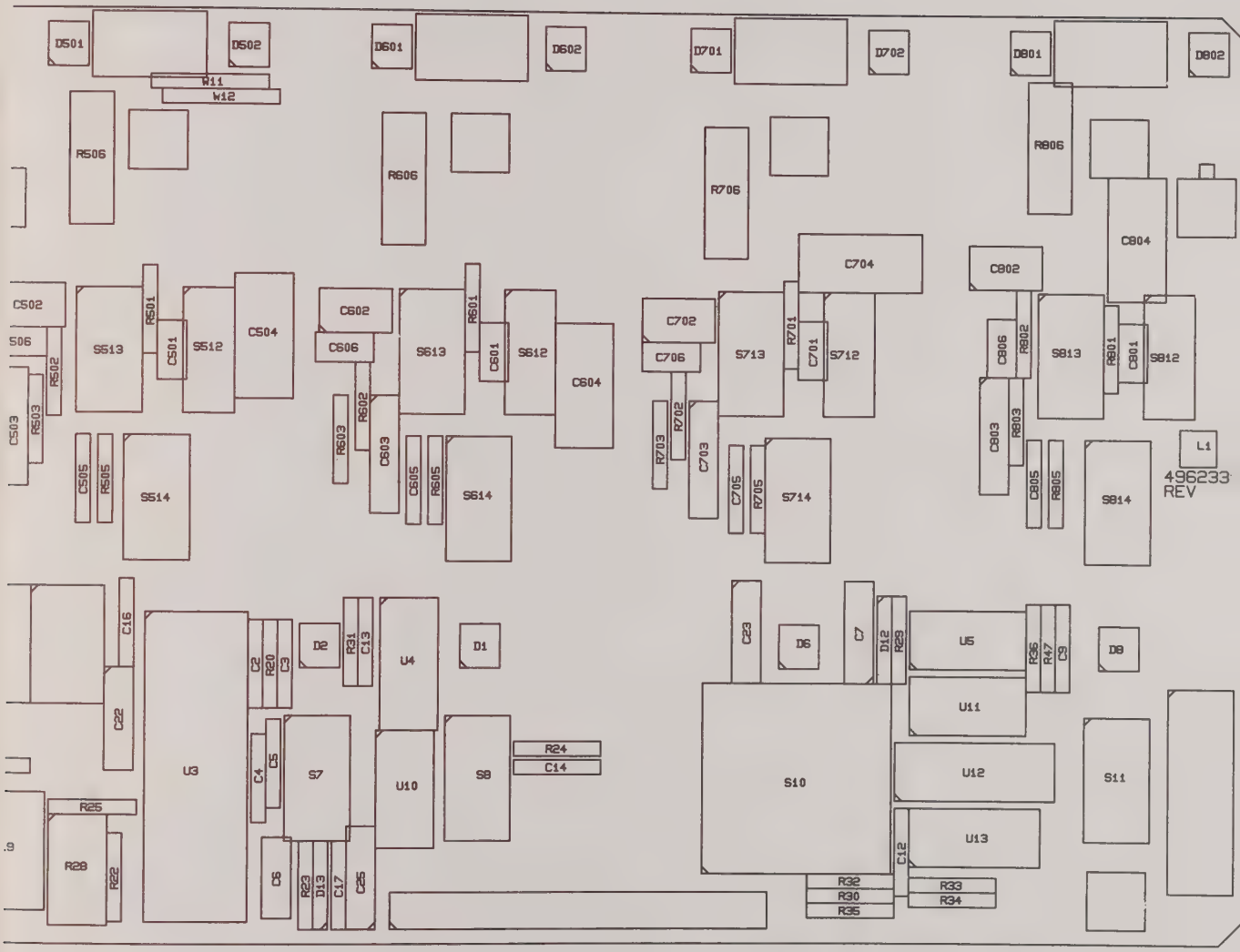

SEMBLY, FRONT PANEL - 896233 (8 Channel)

MULTI-CHANNEL WAVEFORM RECORDER
BOARD ASSEMBLY, FRONT PANEL - 896233-1
FIGURE 6-11 (6 Channel)

SYMBOL NUMBER	PART NUMBER	DESCRIPTION
C1	290303-155	Capacitor, 1.5 ufd
C2	5-288757-101	Capacitor, 100 pf
C3	288755-104	Capacitor, .1 ufd
C4	288755-103	Capacitor, .01 ufd
C5	288755-473	Capacitor, .047 ufd
C6	290303-224	Capacitor, .22 ufd
C7	263343-156	Capacitor, 15 ufd
C8	288755-104	Capacitor, .10 ufd
C9, C10	288755-104	Capacitor, .1 ufd
C11, C12	288755-104	Capacitor, .1 ufd
C13, C14	288755-104	Capacitor, .1 ufd
C15, C16	288755-104	Capacitor, .1 ufd
C17, C18	288755-104	Capacitor, .1 ufd
C19, C20	288755-104	Capacitor, .1 ufd
C21	288755-104	Capacitor, .1 ufd
C22, C23	263343-156	Capacitor, 15 ufd
C24, C25	266343-156	Capacitor, 15 ufd
C26, C27	262585-106	Capacitor, 10 ufd
C201	5-231854-200	Capacitor, 20 pf
C301	5-231854-200	Capacitor, 20 pf
C401	5-231854-200	Capacitor, 20 pf
C501	5-231854-200	Capacitor, 20 pf
C601	5-231854-200	Capacitor, 20 pf
C701	5-231854-200	Capacitor, 20 pf
C202	296379-1	Capacitor, Variable, 3-22 pf
C302	296379-1	Capacitor, Variable, 3-22 pf
C402	296379-1	Capacitor, Variable, 3-22 pf
C502	296379-1	Capacitor, Variable, 3-22 pf
C602	296379-1	Capacitor, Variable, 3-22 pf
C702	296379-1	Capacitor, Variable, 3-22 pf
C204	20-296365-823	Capacitor, .082 ufd
C304	20-296365-823	Capacitor, .082 ufd
C404	20-296365-823	Capacitor, .082 ufd
C504	20-296365-823	Capacitor, .082 ufd
C604	20-296365-823	Capacitor, .082 ufd

MULTI-CHANNEL WAVEFORM RECORDER
BOARD ASSEMBLY, FRONT PANEL - 896233-1
FIGURE 6-11 (6 Channel) (Continued)

SYMBOL NUMBER	PART NUMBER	DESCRIPTION
C704	20-296365-823	Capacitor, .082 ufd
C206	5-231854-100	Capacitor, 10 pf
C306	5-231854-100	Capacitor, 10 pf
C406	5-231854-100	Capacitor, 10 pf
C506	5-231854-100	Capacitor, 10 pf
C606	5-231854-100	Capacitor, 10 pf
C706	5-231854-100	Capacitor, 10 pf
C203	294678-102	Capacitor, 1000 pf
C303	294678-102	Capacitor, 1000 pf
C403	294678-102	Capacitor, 1000 pf
C503	294678-102	Capacitor, 1000 pf
C603	294678-102	Capacitor, 1000 pf
C703	294678-102	Capacitor, 1000 pf
D1, D2	296602-2	Diode
D3	296602-2	Diode
D4	296602-1	Diode
D5	296602-1	Diode
D6	296602-1	Diode
D7	296602-2	Diode
D8	296602-2	Diode
D9, D10	289898-1	7 Segment Display, MAN4610A
D11	289898-2	7 Segment Display, ±1 Overflow MAN4630A
D12	289662	Diode
D13	241133	Diode
D201	296602-1	Diode
D301	296602-1	Diode
D401	296602-1	Diode
D501	296602-1	Diode
D601	296602-1	Diode
D701	296602-1	Diode
D202	296602-3	Diode
D302	296602-3	Diode
D402	296602-3	Diode
D502	296602-3	Diode
D602	296602-3	Diode

MULTI-CHANNEL WAVEFORM RECORDER
BOARD ASSEMBLY, FRONT PANEL - 896233-1
FIGURE 6-11 (6 Channel) (Continued)

SYMBOL NUMBER	PART NUMBER	DESCRIPTION
D702	296602-3	Diode
R1	R1-288308-10251	Resistor, 10.25 Kohm
R2, R3	R1-288308-10001	Resistor, 10 Kohm
R4, R5	R1-288308-10001	Resistor, 10 Kohm
R6, R7	R1-288308-50000	Resistor, 5 Kohm
R8, R9	R1-288308-50000	Resistor, 5 Kohm
R10	R1-288308-60000	Resistor, 6 Kohm
R11, R12	1-288308-50000	Resistor, 5 Kohm
R13	1-288308-50000	Resistor, 5 Kohm
R14	1-288308-50001	Resistor, 50 Kohm
R15, R16	1-265969-30003	Resistor, 3 Megohm
R17	R1-288308-100R0	Resistor, 100 ohm, .1%
R18	282299-503	Resistor, Variable, 50 Kohm
R19	296380	Resistor, Variable, 10 Kohm
R20	5-241111-104	Resistor, 100 Kohm
R21	R1-288308-20001	Resistor, 20 Kohm
R22	5-241111-105	Resistor, 1 Megohm
R23	5-241111-474	Resistor, 470 Kohm
R25	R1-288308-60000	Resistor, 6 Kohm
R26	R1-288308-25000	Resistor, 2.5 Kohm
R27	R1-288308-50000	Resistor, 5 Kohm
R28	282299-202	Resistor, Variable, 2 Kohm
R29	5-241111-563	Resistor, 56 Kohm
R30	5-241111-222	Resistor, 2.2 Kohm
R31	5-241111-222	Resistor, 2.2 Kohm
R32	5-241111-222	Resistor, 2.2 Kohm
R33	5-241111-222	Resistor, 2.2 Kohm
R34	5-241111-222	Resistor, 2.2 Kohm
R35	5-241111-222	Resistor, 2.2 Kohm
R36	5-241111-222	Resistor, 2.2 Kohm
R37	5-241111-222	Resistor, 2.2 Kohm
R38	5-241111-222	Resistor, 2.2 Kohm
R39	5-241111-222	Resistor, 2.2 Kohm
R40	5-241111-222	Resistor, 2.2 Kohm
R41	5-241111-222	Resistor, 2.2 Kohm

MULTI-CHANNEL WAVEFORM RECORDER
BOARD ASSEMBLY, FRONT PANEL - 896233-1
FIGURE 6-11 (6 Channel) (Continued)

SYMBOL NUMBER	PART NUMBER	DESCRIPTION
R42	5-241111-222	Resistor, 2.2 Kohm
R43	5-241111-222	Resistor, 2.2 Kohm
R44	5-241111-222	Resistor, 2.2 Kohm
R45	5-241111-222	Resistor, 2.2 Kohm
R46	5-241111-222	Resistor, 2.2 Kohm
R47	5-241111-222	Resistor, 2.2 Kohm
R48	5-241111-222	Resistor, 2.2 Kohm
R49	5-241111-222	Resistor, 2.2 Kohm
R50	5-241111-222	Resistor, 2.2 Kohm
R201	R1-288308-49502	Resistor, 495 Kohm
R301	R1-288308-49502	Resistor, 495 Kohm
R401	R1-288308-49502	Resistor, 495 Kohm
R501	R1-288308-49502	Resistor, 495 Kohm
R601	R1-288308-49502	Resistor, 495 Kohm
R701	R1-288308-49502	Resistor, 495 Kohm
R202	R1-288308-49502	Resistor, 495 Kohm
R302	R1-288308-49502	Resistor, 495 Kohm
R402	R1-288308-49502	Resistor, 495 Kohm
R502	R1-288308-49502	Resistor, 495 Kohm
R602	R1-288308-49502	Resistor, 495 Kohm
R702	R1-288308-49502	Resistor, 495 Kohm
R203	R1-288308-10001	Resistor, 10 Kohm
R303	R1-288308-10001	Resistor, 10 Kohm
R403	R1-288308-10001	Resistor, 10 Kohm
R503	R1-288308-10001	Resistor, 10 Kohm
R603	R1-288308-10001	Resistor, 10 Kohm
R703	R1-288308-10001	Resistor, 10 Kohm
R205	5-241111-222	Resistor, 2.2 Kohm
R305	5-241111-222	Resistor, 2.2 Kohm
R405	5-241111-222	Resistor, 2.2 Kohm
R505	5-241111-222	Resistor, 2.2 Kohm
R605	5-241111-222	Resistor, 2.2 Kohm
R705	5-241111-222	Resistor, 2.2 Kohm
R206	5-115558-104	Resistor, 100 Kohm
R306	5-115558-104	Resistor, 100 Kohm

MULTI-CHANNEL WAVEFORM RECORDER
BOARD ASSEMBLY, FRONT PANEL - 896233-1
FIGURE 6-11 (6 Channel) (Continued)

SYMBOL NUMBER	PART NUMBER	DESCRIPTION
R406	5-115558-104	Resistor, 100 Kohm
R506	5-115558-104	Resistor, 100 Kohm
R606	5-115558-104	Resistor, 100 Kohm
R706	5-115558-104	Resistor, 100 Kohm
S1	296503-5	Switch, Lever
S2		Switch
S3	296503-5	Switch, Lever
S4	296503-2	Switch, Lever
S5	296503-5	Switch, Lever
S6	296503-1	Switch, Lever
S7	296503-4	Switch, Lever
S8		Switch
S9	296501	Switch, Rotary
S10	295602	Switch, Rotary
S11	296503-5	Switch, Lever
S212	296504-1	Switch, Lever
S312	296504-1	Switch, Lever
S412	296504-1	Switch, Lever
S512	296504-1	Switch, Lever
S612	296504-1	Switch, Lever
S712	296504-1	Switch, Lever
S113	296504-2	Switch, Lever
S213	296504-2	Switch, Lever
S313	296504-2	Switch, Lever
S413	296504-2	Switch, Lever
S513	296504-2	Switch, Lever
S613	296504-2	Switch, Lever
S713	296504-2	Switch, Lever
S813	296504-2	Switch, Lever
S214	296503-3	Switch, Lever
S314	296503-3	Switch, Lever
S414	296503-3	Switch, Lever
S514	296503-3	Switch, Lever
S614	296503-3	Switch, Lever
S714	296503-3	Switch, Lever

MULTI-CHANNEL WAVEFORM RECORDER
BOARD ASSEMBLY, FRONT PANEL - 896233-1
FIGURE 6-11 (6 Channel) (Continued)

SYMBOL NUMBER	PART NUMBER	DESCRIPTION
U1	296120	I.C., LM319
U2	291062-3	I.C., LF374H/AT
U3	296368	I.C., TSD7107
U4	290169-85	I.C., 74LS85
U5	290169-122	I.C., 74LS122
U6	290169-283	I.C., 74LS283
U7	290169-279	I.C., 74LS279
U8	290169-148	I.C., 74LS148
U9	290169-86	I.C., 74LS86
U10	281105	I.C., MC7474
U11	291235-33	I.C., 7433
U12	290169-373	I.C., 74LS373
U13	290169-85	I.C., 74LS85
W3	267235	Jumper
W6	267235	Jumper
W7	267235	Jumper
W8	267235	Jumper
W9	267235	Jumper
W10	267235	Jumper
W11	267235	Jumper
W12	267235	Jumper

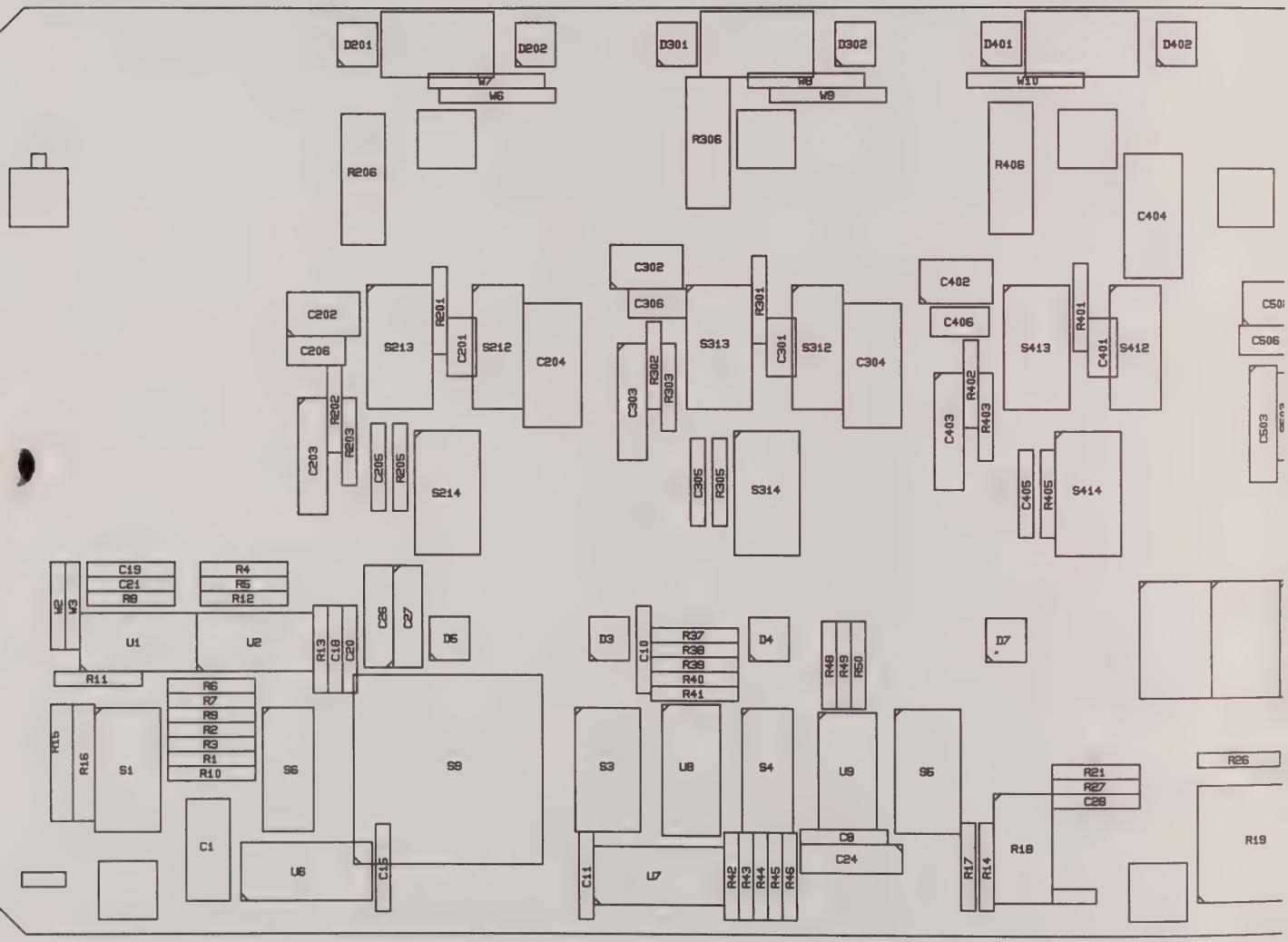

FIGURE 6-11 BOARD AS

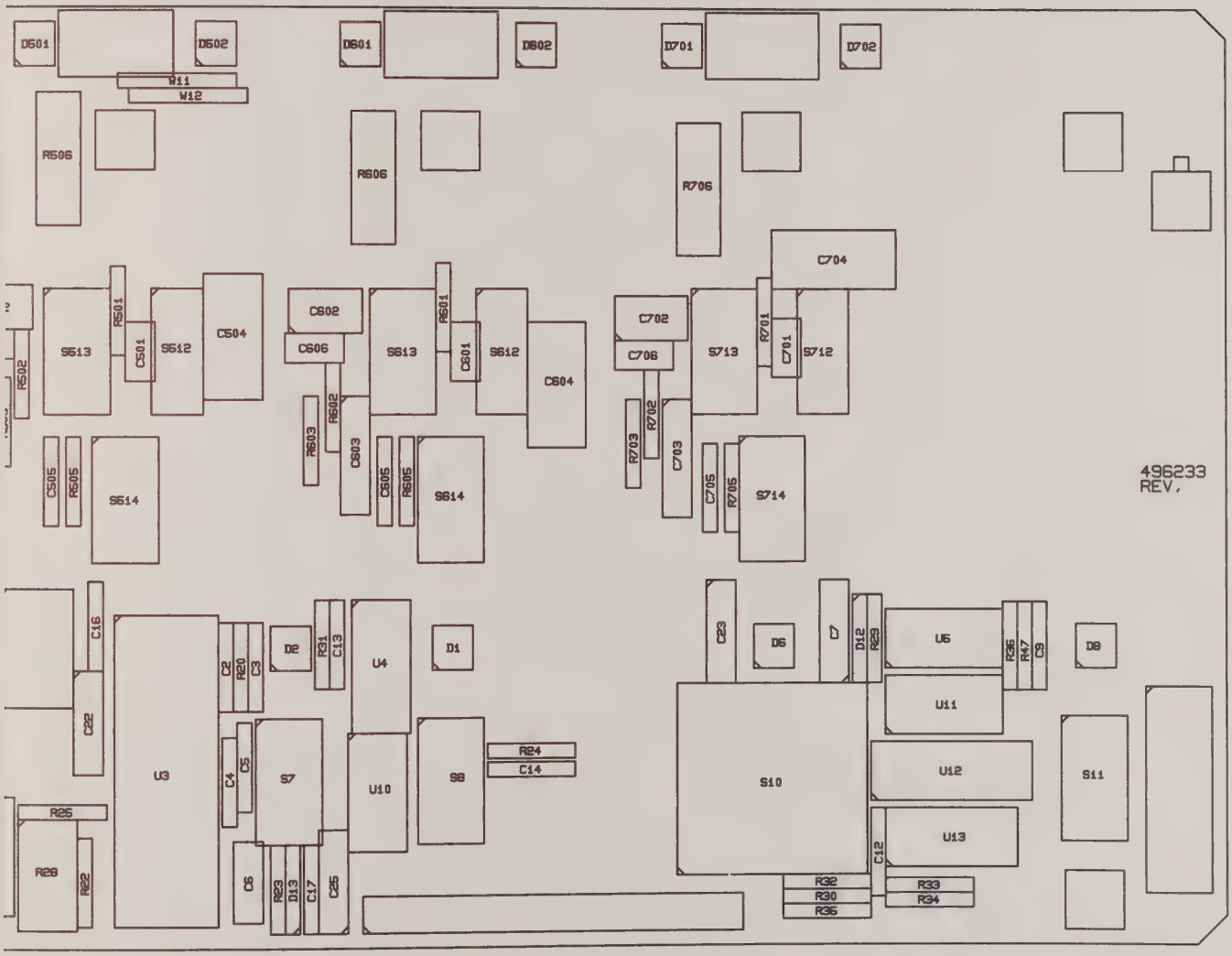
D501
D502
D601
D602
D701
D702
W11
W12
R506
R606
R706
C704
S513
R501
C501
S512
C504
C602
C606
S613
R601
C601
S612
C604
C702
C706
S713
R701
C701
S712
R502
R602
R603
C603
R702
R703
C703
C505
R505
S514
C605
R605
S614
C705
R705
S714
496233
REV.
C16
C22
U3
C2
R20
C3
D2
R31
C13
U4
D1
C4
C5
S7
U10
S8
R24
C14
R26
R28
R22
C6
R23
D13
C17
C25
C23
D6
C7
D12
R29
U5
R36
R47
C9
D8
U11
S10
U12
S11
U13
C12
R32
R30
R35
R33
R34

MULTI-CHANNEL WAVEFORM RECORDER
BOARD ASSEMBLY, FRONT PANEL - 896233-2
FIGURE 6-12 (4 Channel)

SYMBOL NUMBER	PART NUMBER	DESCRIPTION
C1	290303-155	Capacitor, 1.5 ufd
C2	5-288757-101	Capacitor, 100 pf
C3	288755-104	Capacitor, .1 ufd
C4	288755-103	Capacitor, .01 ufd
C5	288755-473	Capacitor, .047 ufd
C6	290303-224	Capacitor, .22 ufd
C7	263343-156	Capacitor, 15 ufd
C8	288755-104	Capacitor, .10 ufd
C9, C10	288755-104	Capacitor, .1 ufd
C11, C12	288755-104	Capacitor, .1 ufd
C13, C14	288755-104	Capacitor, .1 ufd
C15, C16	288755-104	Capacitor, .1 ufd
C17, C18	288755-104	Capacitor, .1 ufd
C19, C20	288755-104	Capacitor, .1 ufd
C21	288755-104	Capacitor, .1 ufd
C22, C23	263343-156	Capacitor, 15 ufd
C24, C25	266343-156	Capacitor, 15 ufd
C26, C27	262585-106	Capacitor, 10 ufd
C101	5-231854-200	Capacitor, 20 pf
C301	5-231854-200	Capacitor, 20 pf
C601	5-231854-200	Capacitor, 20 pf
C801	5-231854-200	Capacitor, 20 pf
C102	296379-1	Capacitor, Variable, 3-22 pf
C302	296379-1	Capacitor, Variable, 3-22 pf
C602	296379-1	Capacitor, Variable, 3-22 pf
C802	296379-1	Capacitor, Variable, 3-22 pf
C104	20-296365-823	Capacitor, .082 ufd
C304	20-296365-823	Capacitor, .082 ufd
C604	20-296365-823	Capacitor, .082 ufd
C804	20-296365-823	Capacitor, .082 ufd
C106	5-231854-100	Capacitor, 10 pf
C306	5-231854-100	Capacitor, 10 pf
C606	5-231854-100	Capacitor, 10 pf
C806	5-231854-100	Capacitor, 10 pf
C103	294678-102	Capacitor, 1000 pf

MULTI-CHANNEL WAVEFORM RECORDER
BOARD ASSEMBLY, FRONT PANEL - 896233-2
FIGURE 6-12 (4 Channel) (Continued)

SYMBOL NUMBER	PART NUMBER	DESCRIPTION
C303	294678-102	Capacitor, 1000 pf
C603	294678-102	Capacitor, 1000 pf
C803	294678-102	Capacitor, 1000 pf
D1, D2	296602-2	Diode
D3	296602-2	Diode
D4	296602-1	Diode
D5	296602-1	Diode
D6	296602-1	Diode
D7	296602-2	Diode
D8	296602-2	Diode
D9, D10	289898-1	7 Segment Display, MAN4610A
D11	289898-2	7 Segment Display, ±1 Overflow MAN4630A
D12	289662	Diode
D13	241133	Diode
D101	296602-1	Diode
D301	296602-1	Diode
D801	296602-1	Diode
D102	296602-3	Diode
D302	296602-3	Diode
D802	296602-3	Diode
R1	R1-288308-10251	Resistor, 10.25 Kohm
R2, R3	R1-288308-10001	Resistor, 10 Kohm
R4, R5	R1-288308-10001	Resistor, 10 Kohm
R6, R7	R1-288308-50000	Resistor, 5 Kohm
R8, R9	R1-288308-50000	Resistor, 5 Kohm
R10	R1-288308-60000	Resistor, 6 Kohm
R11, R12	1-288308-50000	Resistor, 5 Kohm
R13	1-288308-50000	Resistor, 5 Kohm
R14	1-288308-50001	Resistor, 50 Kohm
R15, R16	1-265969-30003	Resistor, 3 Megohm
R17	R1-288308-100R0	Resistor, 100 ohm, .1%
R18	282299-503	Resistor, Variable, 50 Kohm
R19	296380	Resistor, Variable, 10 Kohm
R20	5-241111-104	Resistor, 100 Kohm
R21	R1-288308-20001	Resistor, 20 Kohm

MULTI-CHANNEL WAVEFORM RECORDER
BOARD ASSEMBLY, FRONT PANEL - 896233-2
FIGURE 6-12 (4 Channel) (Continued)

SYMBOL NUMBER	PART NUMBER	DESCRIPTION
R22	5-241111-105	Resistor, 1 Megohm
R23	5-241111-474	Resistor, 470 Kohm
R25	R1-288308-60000	Resistor, 6 Kohm
R26	R1-288308-25000	Resistor, 2.5 Kohm
R27	R1-288308-50000	Resistor, 5 Kohm
R28	282299-202	Resistor, Variable, 2 Kohm
R29	5-241111-563	Resistor, 56 Kohm
R30	5-241111-222	Resistor, 2.2 Kohm
R31	5-241111-222	Resistor, 2.2 Kohm
R32	5-241111-222	Resistor, 2.2 Kohm
R33	5-241111-222	Resistor, 2.2 Kohm
R34	5-241111-222	Resistor, 2.2 Kohm
R35	5-241111-222	Resistor, 2.2 Kohm
R36	5-241111-222	Resistor, 2.2 Kohm
R37	5-241111-222	Resistor, 2.2 Kohm
R38	5-241111-222	Resistor, 2.2 Kohm
R39	5-241111-222	Resistor, 2.2 Kohm
R40	5-241111-222	Resistor, 2.2 Kohm
R41	5-241111-222	Resistor, 2.2 Kohm
R42	5-241111-222	Resistor, 2.2 Kohm
R43	5-241111-222	Resistor, 2.2 Kohm
R44	5-241111-222	Resistor, 2.2 Kohm
R45	5-241111-222	Resistor, 2.2 Kohm
R46	5-241111-222	Resistor, 2.2 Kohm
R47	5-241111-222	Resistor, 2.2 Kohm
R48	5-241111-222	Resistor, 2.2 Kohm
R49	5-241111-222	Resistor, 2.2 Kohm
R50	5-241111-222	Resistor, 2.2 Kohm
R101	R1-288308-49502	Resistor, 495 Kohm
R301	R1-288308-49502	Resistor, 495 Kohm
R601	R1-288308-49502	Resistor, 495 Kohm
R801	R1-288308-49502	Resistor, 495 Kohm
R102	R1-288308-49502	Resistor, 495 Kohm
R302	R1-288308-49502	Resistor, 495 Kohm
R602	R1-288308-49502	Resistor, 495 Kohm

MULTI-CHANNEL WAVEFORM RECORDER
BOARD ASSEMBLY, FRONT PANEL - 896233-2
FIGURE 6-12 (4 Channel) (Continued)

SYMBOL NUMBER	PART NUMBER	DESCRIPTION
R802	R1-288308-49502	Resistor, 495 Kohm
R103	R1-288308-10001	Resistor, 10 Kohm
R303	R1-288308-10001	Resistor, 10 Kohm
R603	R1-288308-10001	Resistor, 10 Kohm
R803	R1-288308-10001	Resistor, 10 Kohm
R105	5-241111-222	Resistor, 2.2 Kohm
R305	5-241111-222	Resistor, 2.2 Kohm
R605	5-241111-222	Resistor, 2.2 Kohm
R805	5-241111-222	Resistor, 2.2 Kohm
R106	5-115558-104	Resistor, 100 Kohm
R306	5-115558-104	Resistor, 100 Kohm
R606	5-115558-104	Resistor, 100 Kohm
R806	5-115558-104	Resistor, 100 Kohm
S1	296503-5	Switch, Lever
S2		Switch
S3	296503-5	Switch, Lever
S4	296503-2	Switch, Lever
S5	296503-5	Switch, Lever
S6	296503-1	Switch, Lever
S7	296503-4	Switch, Lever
S8		Switch
S9	296501	Switch, Rotary
S10	295602	Switch, Rotary
S11	296503-5	Switch, Lever
S112	296504-1	Switch, Lever
S312	296504-1	Switch, Lever
S612	296504-1	Switch, Lever
S812	296504-1	Switch, Lever
S113	296504-2	Switch, Lever
S313	296504-2	Switch, Lever
S613	296504-2	Switch, Lever
S813	296504-2	Switch, Lever
S114	296503-3	Switch, Lever
S314	296503-3	Switch, Lever
S614	296503-3	Switch, Lever

MULTI-CHANNEL WAVEFORM RECORDER
BOARD ASSEMBLY, FRONT PANEL - 896233-2
FIGURE 6-12 (4 Channel) (Continued)

SYMBOL NUMBER	PART NUMBER	DESCRIPTION
S814	296503-3	Switch, Lever
U1	296120	I.C., LM319
U2	291062-3	I.C., LF374H/AT
U3	296368	I.C., TSD7107
U4	290169-85	I.C., 74LS85
U5	290169-122	I.C., 74LS122
U6	290169-283	I.C., 74LS283
U7	290169-279	I.C., 74LS279
U8	290169-148	I.C., 74LS148
U9	290169-86	I.C., 74LS86
U10	281105	I.C., MC7474
U11	291235-33	I.C., 7433
U12	290169-373	I.C., 74LS373
U13	290169-85	I.C., 74LS85
W1	267235	Jumper
W2	267235	Jumper
W3	267235	Jumper
W4	267235	Jumper
W5	267235	Jumper
W6	267235	Jumper
W7	267235	Jumper
W8	267235	Jumper
W9	267235	Jumper
W10	267235	Jumper
W11	267235	Jumper
W12	267235	Jumper

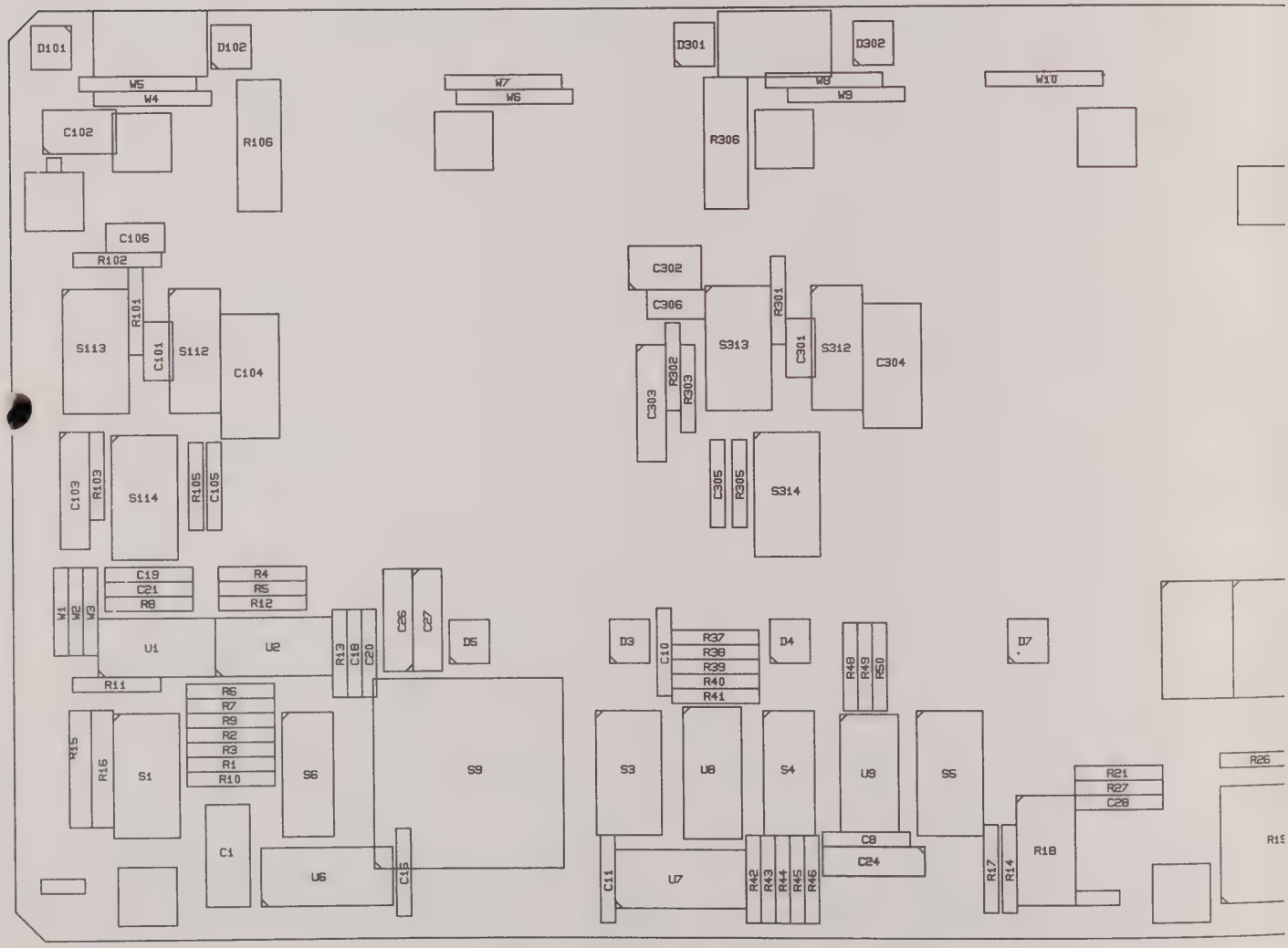

FIGURE 6-12 BOARD AS

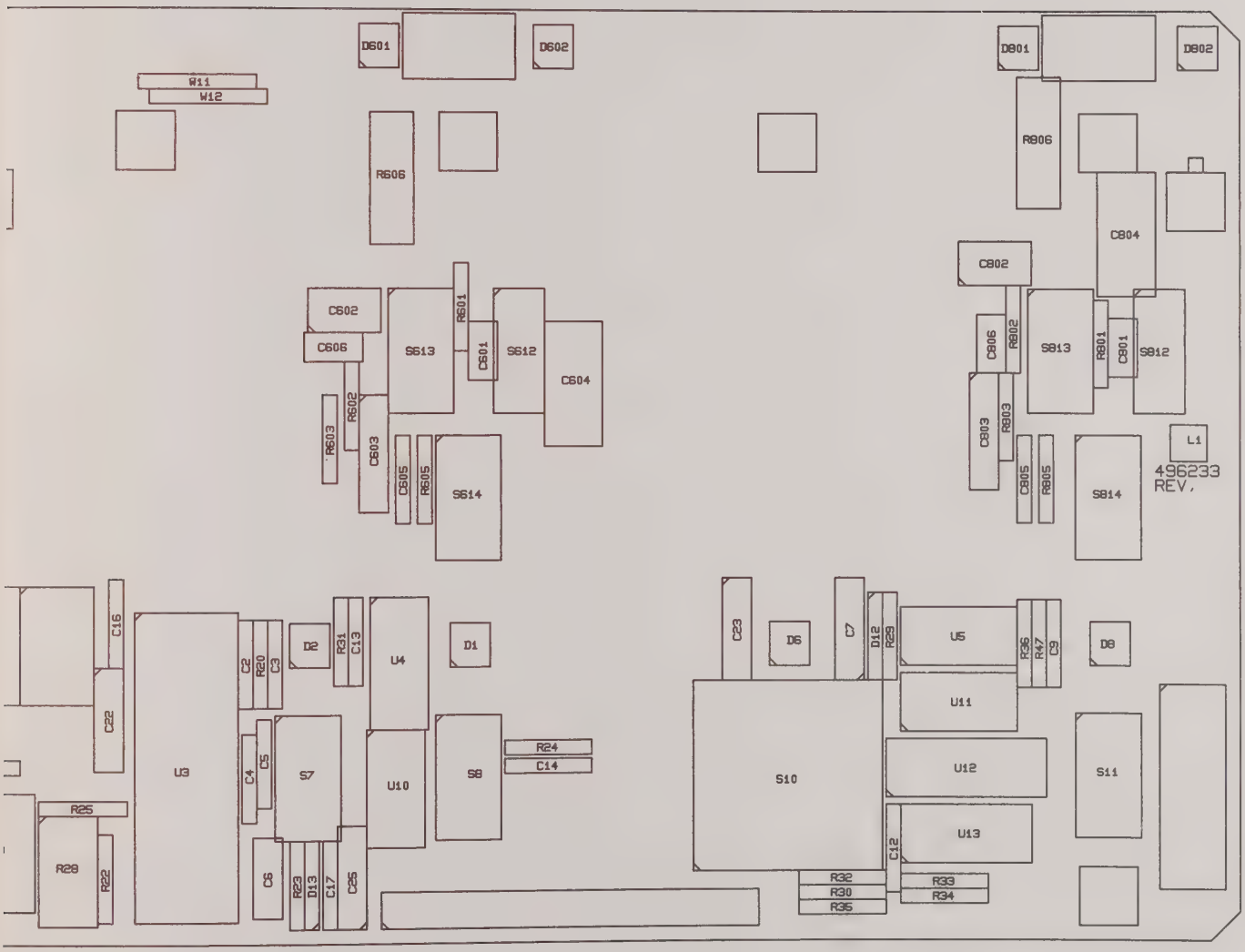

SEMBLY, FRONT PANEL - 896233-2 (4 Channel)

MULTI-CHANNEL WAVEFORM RECORDER
BOARD ASSEMBLY, ANALOG - 896235
FIGURE 6-13 (8 Channel)

SYMBOL NUMBER	PART NUMBER	DESCRIPTION
C3	240352-103	Capacitor, .01 ufd
C5	288755-104	Capacitor, .1 ufd
C6	288755-104	Capacitor, .1 ufd
C7	288755-104	Capacitor, .1 ufd
C8	288755-104	Capacitor, .1 ufd
C9	288755-104	Capacitor, .1 ufd
C10	288755-104	Capacitor, .1 ufd
C102	288755-104	Capacitor, .1 ufd
C103	5-288757-271	Capacitor, 390 pf
C104	5-288755-181	Capacitor, 180 pf
C105	5-288755-181	Capacitor, 270 pf
C106	5-288755-181	Capacitor, 180 pf
C107	240352-100	Capacitor, 10 pf
C108	294678-562	Capacitor, 5600 pf
C109	288755-104	Capacitor, .1 ufd
C110	288755-104	Capacitor, .1 ufd
C111	262956-226	Capacitor, 22 ufd
C112	5-125904-472	Capacitor, 4700 pf
C113	5-125904-472	Capacitor, 4700 pf
C114	5-125904-103	Capacitor, .01 ufd
C115	5-125904-222	Capacitor, 2200 pf
C116	288755-104	Capacitor, .1 ufd
C117	288755-104	Capacitor, .1 ufd
C119	240352-100	Capacitor, 10 pf
C120	5-288755-181	Capacitor, 180 pf
C201	288755-104	Capacitor, .1 ufd
C202	288755-104	Capacitor, .1 ufd
C203	5-288757-391	Capacitor, 390 pf
C204	5-288755-181	Capacitor, 180 pf
C205	5-288757-271	Capacitor, 270 pf
C206	5-288755181	Capacitor, 180 pf
C207	240352-100	Capacitor, 10 pf
C208	294678-562	Capacitor, 5600 pf
C209	288755-104	Capacitor, .1 ufd
C210	288755-104	Capacitor, .1 ufd
C211	262956-226	Capacitor, 22 ufd
C212	5-125904-472	Capacitor, 4700 pf
C213	5-125904-472	Capacitor, 4700 pf
C214	5-125904-103	Capacitor, .01 ufd
C215	5-125904-222	Capacitor, 2200 pf
C216	288755-104	Capacitor, .1 ufd
C217	288755-104	Capacitor, .1 ufd
C219	240352-100	Capacitor, 10 pf
C220	5-288755-181	Capacitor, 180 pf

MULTI-CHANNEL WAVEFORM RECORDER
BOARD ASSEMBLY, ANALOG - 896235
FIGURE 6-13 (8 Channel) (Continued)

SYMBOL NUMBER	PART NUMBER	DESCRIPTION
C301	288755-104	Capacitor, .1 ufd
C302	288755-104	Capacitor, .1 ufd
C303	5-288757-391	Capacitor, 390 pf
C304	5-288755-181	Capacitor, 180 pf
C305	5-288757-271	Capacitor, 270 pf
C306	5-288755-181	Capacitor, 180 pf
C307	240352-100	Capacitor, 10 pf
C308	294678-562	Capacitor, 5600 pf
C309	288755-104	Capacitor, .1 ufd
C310	288755-104	Capacitor, .1 ufd
C311	262956-226	Capacitor, 22 ufd
C312	5-125904-472	Capacitor, 4700 pf
C314	5-125904-103	Capacitor, .01 ufd
C315	5-125904-222	Capacitor, 2200 pf
C316	288755-104	Capacitor, .1 ufd
C317	288755-104	Capacitor, .1 ufd
C319	240352-100	Capacitor, 10 pf
C320	5-288755-181	Capacitor, 180 pf
C401	288755-104	Capacitor, .1 ufd
C402	288755-104	Capacitor, .1 ufd
C403	5-288757-391	Capacitor, 390 pf
C404	5-288755-181	Capacitor, 180 pf
C405	5-288757-271	Capacitor, 270 pf
C406	5-288755-181	Capacitor, 180 pf
C407	240352-100	Capacitor, 10 pf
C408	294678-562	Capacitor, 5600 pf
C409	288755-104	Capacitor, .1 ufd
C410	288755-104	Capacitor, .1 ufd
C411	262956-226	Capacitor, 22 ufd
C412	5-125904-472	Capacitor, 4700 pf
C413	5-125904-472	Capacitor, 4700 pf
C414	5-125904-103	Capacitor, .01 ufd
C415	5-125904-222	Capacitor, 2200 pf
C416	288755-104	Capacitor, .1 ufd
C417	288755-104	Capacitor, .1 ufd
C419	240352-100	Capacitor, 10 pf
C420	5-288755-181	Capacitor, 180 pf
C501	288755-104	Capacitor, .1 ufd
C502	288755-104	Capacitor, .1 ufd
C503	5-288757-271	Capacitor, 270 pf
C504	5-288755-181	Capacitor, 180 pf
C505	5-288757-271	Capacitor, 270 pf
C506	5-288755-181	Capacitor, 180 pf
C507	240352-100	Capacitor, 10 pf
C508	294678-562	Capacitor, 5600 pf

MULTI-CHANNEL WAVEFORM RECORDER
BOARD ASSEMBLY, ANALOG - 896235
FIGURE 6-13 (8 Channel) (Continued)

SYMBOL NUMBER	PART NUMBER	DESCRIPTION
C509	288755-104	Capacitor, .1 ufd
C510	288755-104	Capacitor, .1 ufd
C511	262956-226	Capacitor, 22 ufd
C512	5-125904-472	Capacitor, 4700 pf
C513	5-125904-472	Capacitor, 4700 pf
C514	5-125904-103	Capacitor, .01 ufd
C515	5-125904-222	Capacitor, 2200 pf
C516	288755-104	Capacitor, .1 ufd
C517	288755-104	Capacitor, .1 ufd
C519	240352-100	Capacitor, 10 pf
C520	5-288755-181	Capacitor, 180 pf
C601	288755-104	Capacitor, .1 ufd
C602	288755-104	Capacitor, .1 ufd
C603	5-288757-391	Capacitor, 390 pf
C604	5-288755-181	Capacitor, 180 pf
C605	5-288757-271	Capacitor, 270 pf
C606	5-288755-181	Capacitor, 180 pf
C607	240352-100	Capacitor, 10 pf
C608	294678-562	Capacitor, 5600 pf
C609	288755-104	Capacitor, .1 ufd
C610	288755-104	Capacitor, .1 ufd
C611	262956-226	Capacitor, 22 ufd
C612	5-125904-472	Capacitor, 4700 pf
C613	5-125904-472	Capacitor, 4700 pf
C614	5-125904-103	Capacitor, .01 ufd
C615	5-125904-222	Capacitor, 2200 pf
C616	288755-104	Capacitor, .1 ufd
C617	288755-104	Capacitor, .1 ufd
C619	240352-100	Capacitor, 10 pf
C620	5-288755-181	Capacitor, 180 pf
C701	288755-104	Capacitor, .1 ufd
C702	288755-104	Capacitor, .1 ufd
C703	5-288757-391	Capacitor 390 pf
C704	5-288755-181	Capacitor, 180 pf
C705	5-288757-271	Capacitor, 270 pf
C706	5-288755-181	Capacitor, 180 pf
C707	240352-100	Capacitor, 10 pf
C708	294678-562	Capacitor, 5600 pf
C709	288755-104	Capacitor, .1 ufd
C710	288755-104	Capacitor, .1 ufd
C711	262956-226	Capacitor, 22 ufd
C712	5-125904-472	Capacitor, 4700 pf
C713	5-125904-472	Capacitor, 4700 pf
C714	5-125904-103	Capacitor, .01 ufd
C715	5-125904-222	Capacitor, 2200 pf

MULTI-CHANNEL WAVEFORM RECORDER
BOARD ASSEMBLY, ANALOG - 896235
FIGURE 6-13 (8 Channel) (Continued)

SYMBOL NUMBER	PART NUMBER	DESCRIPTION
C716	288755-104	Capacitor, .1 ufd
C717	288755-104	Capacitor, .1 ufd
C719	240352-100	Capacitor, 10 pf
C720	5-288755-181	Capacitor, 180 pf
C801	288755-104	Capacitor, .1 ufd
C802	288755-104	Capacitor, .1 ufd
C803	5-288757-391	Capacitor, 390 pf
C804	5-288755-181	Capacitor, 180 pf
C805	5-288757-271	Capacitor, 270 pf
C806	5-288755-181	Capacitor, 180 pf
C807	240352-100	Capacitor, 10 pf
C808	294678-562	Capacitor, 5600 pf
C809	288755-104	Capacitor, .1 ufd
C810	288755-104	Capacitor, .1 ufd
C811	262956-226	Capacitor, 22 ufd
C812	5-125904-472	Capacitor, 4700 pf
C813	5-125904-472	Capacitor, 4700 pf
C814	5-125904-103	Capacitor, .01 ufd
C815	5-125904-222	Capacitor, 2200 pf
C816	288755-104	Capacitor, .1 ufd
C817	288755-104	Capacitor, .1 ufd
C819	240352-100	Capacitor, 10 pf
C820	5-288755-181	Capacitor, 180 pf
D1	1-230061-8	Diode, 1N4148
D2	1-230061-8	Diode, 1N4148
D3	291152	Zener Diode, 1N753A
D11	288072	Diode, 1N3595
D12	288072	Diode, 1N3595
D13	280440	Diode, 1N4148
D21	288072	Diode, 1N3595
D22	288072	Diode, 1N3595
D23	280440	Diode, 1N4148
D31	288072	Diode, 1N3595
D32	288072	Diode, 1N3595
D33	280440	Diode, 1N4148
D41	288072	Diode, 1N3595
D42	288072	Diode, 1N3595
D43	280440	Diode, 1N4148
D51	288072	Diode, 1N3595
D52	288072	Diode, 1N3595
D53	280440	Diode, 1N4148
D61	288072	Diode, 1N3595
D62	288072	Diode, 1N3595
D63	280440	Diode, 1N4148
D71	288072	Diode, 1N3595

MULTI-CHANNEL WAVEFORM RECORDER
BOARD ASSEMBLY, ANALOG - 896235
FIGURE 6-13 (8 Channel) (Continued)

SYMBOL NUMBER	PART NUMBER	DESCRIPTION
D72	288072	Diode, 1N3595
D73	280440	Diode, 1N4148
D81	288072	Diode, 1N3595
D82	288072	Diode, 1N3595
D83	280440	Diode, 1N4148
J6	296509-9	Connector
J7	296509-9	Connector
J11	1-293893-2	Connector
J21	1-293893-2	Connector
J31	1-293893-2	Connector
J41	1-293893-2	Connector
J51	1-293893-2	Connector
J61	1-293893-2	Connector
J71	1-293893-2	Connector
J81	1-293893-2	Connector
Q13	281292-3	Transistor, 2N4393
Q23	281292-3	Transistor, 2N4393
Q33	281292-3	Transistor, 2N4393
Q43	281292-3	Transistor, 2N4393
Q53	281292-3	Transistor, 2N4393
Q63	281292-3	Transistor, 2N4393
Q73	281292-3	Transistor, 2N4393
Q83	281292-3	Transistor, 2N4393
R1	5-241111-512	Resistor, 5.1 Kohm
R2	5-241111-512	Resistor, 5.1 Kohm
R3	1-265969-47001	Resistor, 47 Kohm
R4	25-265969-70000	Resistor, 7 Kohm
R5	1-288308-29000	Resistor, 2.9 Kohm
R6	1-288308-50000	Resistor, 5 Kohm
R7	1-288308-51000	Resistor, 5.1 Kohm
R8	1-288308-5000	Resistor, 5 Kohm
R9	5-115557-226	Resistor, 22 Megohm
R10	5-241111-222	Resistor, 2.2 Kohm
R11	5-241111-222	Resistor, 2.2 Kohm
R12	5-241111-222	Resistor, 2.2 Kohm
R101	1-288308-10001	Resistor, 10 Kohm
R201	1-288308-10001	Resistor, 10 Kohm
R301	1-288308-10001	Resistor, 10 Kohm
R401	1-288308-10001	Resistor, 10 Kohm
R501	1-288308-10001	Resistor, 10 Kohm
R601	1-288308-10001	Resistor, 10 Kohm
R701	1-288308-10001	Resistor, 10 Kohm
R801	1-288308-10001	Resistor, 10 Kohm
R102	5-241111-101	Resistor, 100 ohm
R202	5-241111-101	Resistor, 100 ohm

MULTI-CHANNEL WAVEFORM RECORDER
BOARD ASSEMBLY, ANALOG - 896235
FIGURE 6-13 (8 Channel) (Continued)

SYMBOL NUMBER	PART NUMBER	DESCRIPTION
R302	5-241111-101	Resistor, 100 ohm
R402	5-241111-101	Resistor, 100 ohm
R502	5-241111-101	Resistor, 100 ohm
R602	5-241111-101	Resistor, 100 ohm
R702	5-241111-101	Resistor, 100 ohm
R802	5-241111-101	Resistor, 100 ohm
R103	269085-103	Resistor, Variable, 10 Kohm
R203	269085-103	Resistor, Variable, 10 Kohm
R303	269085-103	Resistor, Variable, 10 Kohm
R403	269085-103	Resistor, Variable, 10 Kohm
R503	269085-103	Resistor, Variable, 10 Kohm
R603	269085-103	Resistor, Variable, 10 Kohm
R703	269085-103	Resistor, Variable, 10 Kohm
R803	269085-103	Resistor, Variable, 10 Kohm
R104	1-288308-20001	Resistor, 20 Kohm
R204	1-288308-20001	Resistor, 20 Kohm
R304	1-288308-20001	Resistor, 20 Kohm
R404	1-288308-20001	Resistor, 20 Kohm
R504	1-288308-20001	Resistor, 20 Kohm
R604	1-288308-20001	Resistor, 20 Kohm
R704	1-288308-20001	Resistor, 20 Kohm
R804	1-288308-20001	Resistor, 20 Kohm
R105	1-288308-10001	Resistor, 10 Kohm
R205	1-288308-10001	Resistor, 10 Kohm
R305	1-288308-10001	Resistor, 10 Kohm
R405	1-288308-10001	Resistor, 10 Kohm
R505	1-288308-10001	Resistor, 10 Kohm
R605	1-288308-10001	Resistor, 10 Kohm
R705	1-288308-10001	Resistor, 10 Kohm
R805	1-288308-10001	Resistor, 10 Kohm
R106	5-241111-101	Resistor, 100 ohm
R206	5-241111-101	Resistor, 100 ohm
R306	5-241111-101	Resistor, 100 ohm
R406	5-241111-101	Resistor, 100 ohm
R506	5-241111-101	Resistor, 100 ohm
R606	5-241111-101	Resistor, 100 ohm
R706	5-241111-101	Resistor, 100 ohm
R806	5-241111-101	Resistor, 100 ohm
R108	1-288481	Resistor Network, 100 ohm - 90 Kohm
R208	1-288481	Resistor Network, 100 ohm - 90 Kohm

MULTI-CHANNEL WAVEFORM RECORDER
BOARD ASSEMBLY, ANALOG - 896235
FIGURE 6-13 (8 Channel) (Continued)

SYMBOL NUMBER	PART NUMBER	DESCRIPTION
R308	1-288481	Resistor Network, 100 ohm - 90 Kohm
R408	1-288481	Resistor Network, 100 ohm - 90 Kohm
R508	1-288481	Resistor Network, 100 ohm - 90 Kohm
R608	1-288481	Resistor Network, 100 ohm - 90 Kohm
R708	1-288481	Resistor Network, 100 ohm - 90 Kohm
R808	1-288481	Resistor Network, 100 ohm - 90 Kohm
R116	1-288308-12500	Resistor, 1.25 Kohm
R216	1-288308-12500	Resistor, 1.25 Kohm
R316	1-288308-12500	Resistor, 1.25 Kohm
R416	1-288308-12500	Resistor, 1.25 Kohm
R516	1-288308-12500	Resistor, 1.25 Kohm
R616	1-288308-12500	Resistor, 1.25 Kohm
R716	1-288308-12500	Resistor, 1.25 Kohm
R816	1-288308-12500	Resistor, 1.25 Kohm
R117	1-288308-10001	Resistor, 10 Kohm
R217	1-288308-10001	Resistor, 10 Kohm
R317	1-288308-10001	Resistor, 10 Kohm
R417	1-288308-10001	Resistor, 10 Kohm
R517	1-288308-10001	Resistor, 10 Kohm
R617	1-288308-10001	Resistor, 10 Kohm
R717	1-288308-10001	Resistor, 10 Kohm
R817	1-288308-10001	Resistor, 10 Kohm
R118	269085-202	Resistor, Variable, 2 Kohm
R218	269085-202	Resistor, Variable, 2 Kohm
R318	269085-202	Resistor, Variable, 2 Kohm
R418	269085-202	Resistor, Variable, 2 Kohm
R518	269085-202	Resistor, Variable, 2 Kohm
R618	269085-202	Resistor, Variable, 2 Kohm
R718	269085-202	Resistor, Variable, 2 Kohm
R818	269085-202	Resistor, Variable, 2 Kohm
R119	269085-103	Resistor, Variable, 10 Kohm
R219	269085-103	Resistor, Variable, 10 Kohm
R319	269085-103	Resistor, Variable, 10 Kohm
R419	269085-103	Resistor, Variable, 10 Kohm
R519	269085-103	Resistor, Variable, 10 Kohm
R619	269085-103	Resistor, Variable, 10 Kohm
R719	269085-103	Resistor, Variable, 10 Kohm
R819	269085-103	Resistor, Variable, 10 Kohm
R120	1-288308-25000	Resistor, 2.5 Kohm
R220	1-288308-25000	Resistor, 2.5 Kohm

MULTI-CHANNEL WAVEFORM RECORDER
BOARD ASSEMBLY, ANALOG - 896235
FIGURE 6-13 (8 Channel) (Continued)

SYMBOL NUMBER	PART NUMBER	DESCRIPTION
R320	1-288308-25000	Resistor, 2.5 Kohm
R420	1-288308-25000	Resistor, 2.5 Kohm
R520	1-288308-25000	Resistor, 2.5 Kohm
R620	1-288308-25000	Resistor, 2.5 Kohm
R720	1-288308-25000	Resistor, 2.5 Kohm
R820	1-288308-25000	Resistor, 2.5 Kohm
R121	1-288308-25000	Resistor, 2.5 Kohm
R221	1-288308-25000	Resistor, 2.5 Kohm
R321	1-288308-25000	Resistor, 2.5 Kohm
R421	1-288308-25000	Resistor, 2.5 Kohm
R521	1-288308-25000	Resistor, 2.5 Kohm
R621	1-288308-25000	Resistor, 2.5 Kohm
R721	1-288308-25000	Resistor, 2.5 Kohm
R821	1-288308-25000	Resistor, 2.5 Kohm
R122	1-288308-10001	Resistor, 10 Kohm
R222	1-288308-10001	Resistor, 10 Kohm
R322	1-288308-10001	Resistor, 10 Kohm
R422	1-288308-10001	Resistor, 10 Kohm
R522	1-288308-10001	Resistor, 10 Kohm
R622	1-288308-10001	Resistor, 10 Kohm
R722	1-288308-10001	Resistor, 10 Kohm
R822	1-288308-10001	Resistor, 10 Kohm
R123	1-288308-10001	Resistor, 10 Kohm
R223	1-288308-10001	Resistor, 10 Kohm
R323	1-288308-10001	Resistor, 10 Kohm
R423	1-288308-10001	Resistor, 10 Kohm
R523	1-288308-10001	Resistor, 10 Kohm
R623	1-288308-10001	Resistor, 10 Kohm
R723	1-288308-10001	Resistor, 10 Kohm
R823	1-288308-10001	Resistor, 10 Kohm
R124	1-288308-25000	Resistor, 2.5 Kohm
R224	1-288308-25000	Resistor, 2.5 Kohm
R324	1-288308-25000	Resistor, 2.5 Kohm
R424	1-288308-25000	Resistor, 2.5 Kohm
R524	1-288308-25000	Resistor, 2.5 Kohm
R624	1-288308-25000	Resistor, 2.5 Kohm
R724	1-288308-25000	Resistor, 2.5 Kohm
R824	1-288308-25000	Resistor, 2.5 Kohm
R126	1-288308-25000	Resistor, 2.5 Kohm
R226	1-288308-25000	Resistor, 2.5 Kohm

MULTI-CHANNEL WAVEFORM RECORDER
BOARD ASSEMBLY, ANALOG - 896235
FIGURE 6-13 (8 Channel) (Continued)

SYMBOL NUMBER	PART NUMBER	DESCRIPTION
R326	1-288308-25000	Resistor, 2.5 Kohm
R426	1-288308-25000	Resistor, 2.5 Kohm
R526	1-288308-25000	Resistor, 2.5 Kohm
R626	1-288308-25000	Resistor, 2.5 Kohm
R726	1-288308-25000	Resistor, 2.5 Kohm
R826	1-288308-25000	Resistor, 2.5 Kohm
R127	1-288308-10001	Resistor, 10 Kohm
R227	1-288308-10001	Resistor, 10 Kohm
R327	1-288308-10001	Resistor, 10 Kohm
R427	1-288308-10001	Resistor, 10 Kohm
R527	1-288308-10001	Resistor, 10 Kohm
R627	1-288308-10001	Resistor, 10 Kohm
R727	1-288308-10001	Resistor, 10 Kohm
R827	1-288308-10001	Resistor, 10 Kohm
R128	1-288308-10001	Resistor, 10 Kohm
R228	1-288308-10001	Resistor, 10 Kohm
R328	1-288308-10001	Resistor, 10 Kohm
R428	1-288308-10001	Resistor, 10 Kohm
R528	1-288308-10001	Resistor, 10 Kohm
R628	1-288308-10001	Resistor, 10 Kohm
R728	1-288308-10001	Resistor, 10 Kohm
R828	1-288308-10001	Resistor, 10 Kohm
R129	1-288308-15151	Resistor, 1.515 Kohm
R229	1-288308-15151	Resistor, 1.515 Kohm
R329	1-288308-15151	Resistor, 1.515 Kohm
R429	1-288308-15151	Resistor, 1.515 Kohm
R529	1-288308-15151	Resistor, 1.515 Kohm
R629	1-288308-15151	Resistor, 1.515 Kohm
R729	1-288308-15151	Resistor, 1.515 Kohm
R829	1-288308-15151	Resistor, 1.515 Kohm
R130	1-288308-10001	Resistor, 10 Kohm
R230	1-288308-10001	Resistor, 10 Kohm
R330	1-288308-10001	Resistor, 10 Kohm
R430	1-288308-10001	Resistor, 10 Kohm
R530	1-288308-10001	Resistor, 10 Kohm
R630	1-288308-10001	Resistor, 10 Kohm
R730	1-288308-10001	Resistor, 10 Kohm
R830	1-288308-10001	Resistor, 10 Kohm
R131	284878-102	Resistor, 1 Kohm
R231	284878-102	Resistor, 1 Kohm

MULTI-CHANNEL WAVEFORM RECORDER
BOARD ASSEMBLY, ANALOG - 896235
FIGURE 6-13 (8 Channel) (Continued)

SYMBOL NUMBER	PART NUMBER	DESCRIPTION
R331	284878-102	Resistor, 1 Kohm
R431	284878-102	Resistor, 1 Kohm
R531	284878-102	Resistor, 1 Kohm
R631	284878-102	Resistor, 1 Kohm
R731	284878-102	Resistor, 1 Kohm
R831	284878-102	Resistor, 1 Kohm
R132	284878-103	Resistor, 10 Kohm
R232	284878-103	Resistor, 10 Kohm
R332	284878-103	Resistor, 10 Kohm
R432	284878-103	Resistor, 10 Kohm
R532	284878-103	Resistor, 10 Kohm
R632	284878-103	Resistor, 10 Kohm
R732	284878-103	Resistor, 10 Kohm
R832	284878-103	Resistor, 10 Kohm
R133	5-241111-151	Resistor, 150 ohm
R233	5-241111-151	Resistor, 150 ohm
R333	5-241111-151	Resistor, 150 ohm
R433	5-241111-151	Resistor, 150 ohm
R533	5-241111-151	Resistor, 150 ohm
R633	5-241111-151	Resistor, 150 ohm
R733	5-241111-151	Resistor, 150 ohm
R833	5-241111-151	Resistor, 150 ohm
R134	284878-103	Resistor, 10 Kohm
R234	284878-103	Resistor, 10 Kohm
R334	284878-103	Resistor, 10 Kohm
R434	284878-103	Resistor, 10 Kohm
R534	284878-103	Resistor, 10 Kohm
R634	284878-103	Resistor, 10 Kohm
R734	284878-103	Resistor, 10 Kohm
R834	284878-103	Resistor, 10 Kohm
R135	5-241111-103	Resistor, 10 Kohm
R235	5-241111-103	Resistor, 10 Kohm
R335	5-241111-103	Resistor, 10 Kohm
R435	5-241111-103	Resistor, 10 Kohm
R535	5-241111-103	Resistor, 10 Kohm
R635	5-241111-103	Resistor, 10 Kohm
R735	5-241111-103	Resistor, 10 Kohm
R835	5-241111-103	Resistor, 10 Kohm
R136	5-241111-301	Resistor, 300 ohm
R236	5-241111-301	Resistor, 300 ohm
R336	5-241111-301	Resistor, 300 ohm
R436	5-241111-301	Resistor, 300 ohm
R536	5-241111-301	Resistor, 300 ohm
R636	5-241111-301	Resistor, 300 ohm
R736	5-241111-301	Resistor, 300 ohm

MULTI-CHANNEL WAVEFORM RECORDER
BOARD ASSEMBLY, ANALOG - 896235
FIGURE 6-13 (8 Channel) (Continued)

SYMBOL NUMBER	PART NUMBER	DESCRIPTION
R836	5-241111-301	Resistor, 300 ohm
R137	5-241111-203	Resistor, 20 Kohm
R237	5-241111-203	Resistor, 20 Kohm
R337	5-241111-203	Resistor, 20 Kohm
R437	5-241111-203	Resistor, 20 Kohm
R537	5-241111-203	Resistor, 20 Kohm
R637	5-241111-203	Resistor, 20 Kohm
R737	5-241111-203	Resistor, 20 Kohm
R837	5-241111-203	Resistor, 20 Kohm
R138	5-241111-470	Resistor, 47 ohm
R238	5-241111-470	Resistor, 47 ohm
R338	5-241111-470	Resistor, 47 ohm
R438	5-241111-470	Resistor, 47 ohm
R538	5-241111-470	Resistor, 47 ohm
R638	5-241111-470	Resistor, 47 ohm
R738	5-241111-470	Resistor, 47 ohm
R838	5-241111-470	Resistor, 47 ohm
R139	5-241111-470	Resistor, 47 ohm
R239	5-241111-470	Resistor, 47 ohm
R339	5-241111-470	Resistor, 47 ohm
R439	5-241111-470	Resistor, 47 ohm
R539	5-241111-470	Resistor, 47 ohm
R639	5-241111-470	Resistor, 47 ohm
R739	5-241111-470	Resistor, 47 ohm
R839	5-241111-470	Resistor, 47 ohm
R140	1-288308-35702	Resistor, 357 Kohm
R240	1-288308-35702	Resistor, 357 Kohm
R340	1-288308-35702	Resistor, 357 Kohm
R440	1-288308-35702	Resistor, 357 Kohm
R540	1-288308-35702	Resistor, 357 Kohm
R640	1-288308-35702	Resistor, 357 Kohm
R740	1-288308-35702	Resistor, 357 Kohm
R840	1-288308-35702	Resistor, 357 Kohm
R141	1-288308-35702	Resistor, 357 Kohm
R241	1-288308-35702	Resistor, 357 Kohm
R341	1-288308-35702	Resistor, 357 Kohm
R441	1-288308-35702	Resistor, 357 Kohm
R541	1-288308-35702	Resistor, 357 Kohm
R641	1-288308-35702	Resistor, 357 Kohm
R741	1-288308-35702	Resistor, 357 Kohm

MULTI-CHANNEL WAVEFORM RECORDER
BOARD ASSEMBLY, ANALOG - 896235
FIGURE 6-13 (8 Channel) (Continued)

SYMBOL NUMBER	PART NUMBER	DESCRIPTION
R841	1-288308-35702	Resistor, 357 Kohm
R142	1-288308-27402	Resistor, 274 Kohm
R242	1-288308-27402	Resistor, 274 Kohm
R342	1-288308-27402	Resistor, 274 Kohm
R442	1-288308-27402	Resistor, 274 Kohm
R542	1-288308-27402	Resistor, 274 Kohm
R642	1-288308-27402	Resistor, 274 Kohm
R742	1-288308-27402	Resistor, 274 Kohm
R842	1-288308-27402	Resistor, 274 Kohm
R143	1-288308-30002	Resistor, 300 Kohm
R243	1-288308-30002	Resistor, 300 Kohm
R343	1-288308-30002	Resistor, 300 Kohm
R443	1-288308-30002	Resistor, 300 Kohm
R543	1-288308-30002	Resistor, 300 Kohm
R643	1-288308-30002	Resistor, 300 Kohm
R743	1-288308-30002	Resistor, 300 Kohm
R843	1-288308-30002	Resistor, 300 Kohm
R144	2965111-222	Resistor, 2.2 Kohm
R244	2965111-222	Resistor, 2.2 Kohm
R344	2965111-222	Resistor, 2.2 Kohm
R444	2965111-222	Resistor, 2.2 Kohm
R544	2965111-222	Resistor, 2.2 Kohm
R644	2965111-222	Resistor, 2.2 Kohm
R744	2965111-222	Resistor, 2.2 Kohm
R844	2965111-222	Resistor, 2.2 Kohm
R146	5-115557-1RB	Resistor, 1.8 ohm
R246	5-115557-1RB	Resistor, 1.8 ohm
R346	5-115557-1RB	Resistor, 1.8 ohm
R446	5-115557-1RB	Resistor, 1.8 ohm
R546	5-115557-1RB	Resistor, 1.8 ohm
R646	5-115557-1RB	Resistor, 1.8 ohm
R746	5-115557-1RB	Resistor, 1.8 ohm
R846	5-115557-1RB	Resistor, 1.8 ohm
S1	289742	Switch
U1	290169-123	I.C., 74LS123
U2	290169-123	I.C., 74LS123
U3	291235-9	I.C., 7409
U4	283948	I.C., MC1458P
U5	296276	I.C., MC1488L
U6	296276	I.C., MC1488L
U7	291235-9	I.C., 7409
U8	290169-123	I.C., 74LS123
U9	290169-123	I.C., 74LS123
U11	294181-3	I.C., AD41320
U12	290169-148	I.C., 74LS148

MULTI-CHANNEL WAVEFORM RECORDER
BOARD ASSEMBLY, ANALOG - 896235
FIGURE 6-13 (8 Channel) (Continued)

SYMBOL NUMBER	PART NUMBER	DESCRIPTION
U13	296275-1	I.C., LF411ACN
U14	296119-1	I.C., LF412ACN
U15	296275-2	I.C., LF411CN
U16	296275-2	I.C., LF411CN
U17	296120	I.C., LM319
U18	296119-2	I.C., LF412CN
U19	296275-2	I.C., LF411CN
U21	294181-3	I.C., AD41320
U22	290169-148	I.C., 74LS148
U23	296275-1	I.C., LF411ACN
U24	296119-1	I.C., LF412ACN
U25	296275-2	I.C., LF411CN
U26	296275-2	I.C., LF411CN
U27	296120	I.C., LM319
U28	296119-2	I.C., LF412CN
U29	296275-2	I.C., LF411CN
U31	294181-3	I.C., AD41320
U32	290169-148	I.C., 74LS148
U33	296275-1	I.C., LF411ACN
U34	296119-1	I.C., LF412ACN
U35	296275-2	I.C., LF411CN
U36	296275-2	I.C., LF411CN
U37	296120	I.C., LM319
U38	296119-2	I.C., LF412CN
U39	296275-2	I.C., LF411CN
U41	294181-3	I.C., AD41320
U42	290169-148	I.C., 74LS148
U43	296275-1	I.C., LF411ACN
U44	296119-1	I.C., LF412ACN
U45	296275-2	I.C., LF411CN
U46	296275-2	I.C., LF411CN
U47	296120	I.C., LM319
U48	296119-2	I.C., LF412CN
U49	296275-2	I.C., LF411CN
U51	294181-3	I.C., AD41320
U52	290169-148	I.C., 74LS148
U53	296275-1	I.C., LF411ACN
U54	296119-1	I.C., LF412ACN
U55	296275-2	I.C., LF411CN
U56	296275-2	I.C., LF411CN
U57	296120	I.C., LM319
U58	296119-2	I.C., LF412CN
U59	296275-2	I.C., LF411CN
U61	294181-3	I.C., AD41320
U62	290169-148	I.C., 74LS148

MULTI-CHANNEL WAVEFORM RECORDER
BOARD ASSEMBLY, ANALOG - 896235
FIGURE 6-13 (8 Channel) (Continued)

SYMBOL NUMBER	PART NUMBER	DESCRIPTION
U63	296275-1	I.C., LF411ACN
U64	296119-1	I.C., LF412ACN
U65	296275-2	I.C., LF411CN
U66	296275-2	I.C., LF411CN
U67	296120	I.C., LM319
U68	296119-2	I.C., LF412CN
U69	296275-2	I.C., LF411CN
U71	294181-3	I.C., AD41320
U72	290169-148	I.C., 74LS148
U73	296275-1	I.C., LF411ACN
U74	296119-1	I.C., LF412ACN
U75	296275-2	I.C., LF411CN
U76	296275-2	I.C., LF411CN
U77	296120	I.C., LM319
U78	296119-2	I.C., LF412CN
U79	296275-2	I.C., LF411CN
U81	294181-3	I.C., AD41320
U82	290169-148	I.C., 74LS148
U83	296275-1	I.C., LF411ACN
U84	296119-1	I.C., LF412ACN
U85	296275-2	I.C., LF411CN
U86	296275-2	I.C., LF411CN
U87	296120	I.C., LM319
U88	296119-2	I.C., LF412CN
U89	296275-2	I.C., LF411CN

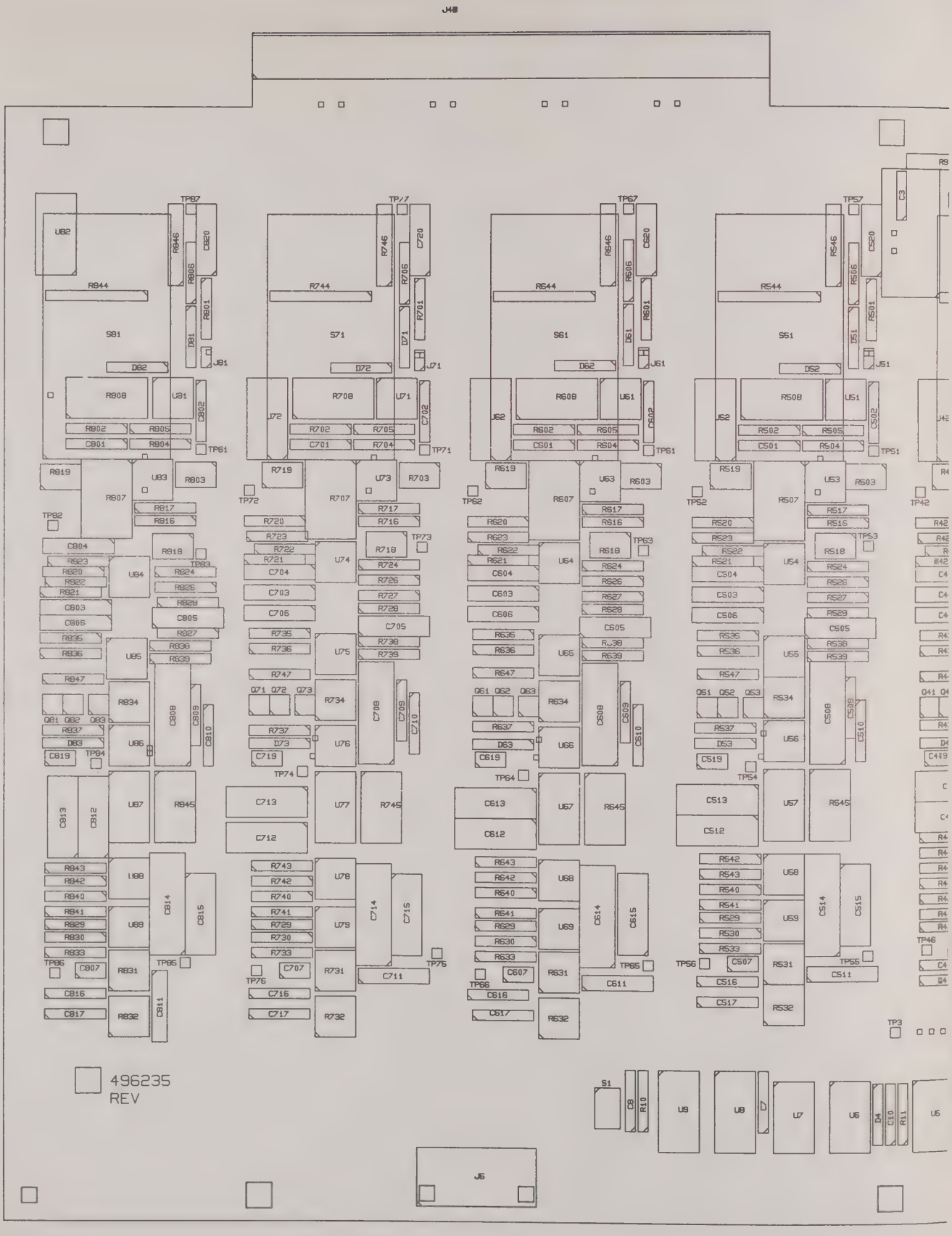

FIGURE 6-13 BOARD ASSEMBLY, ANAL

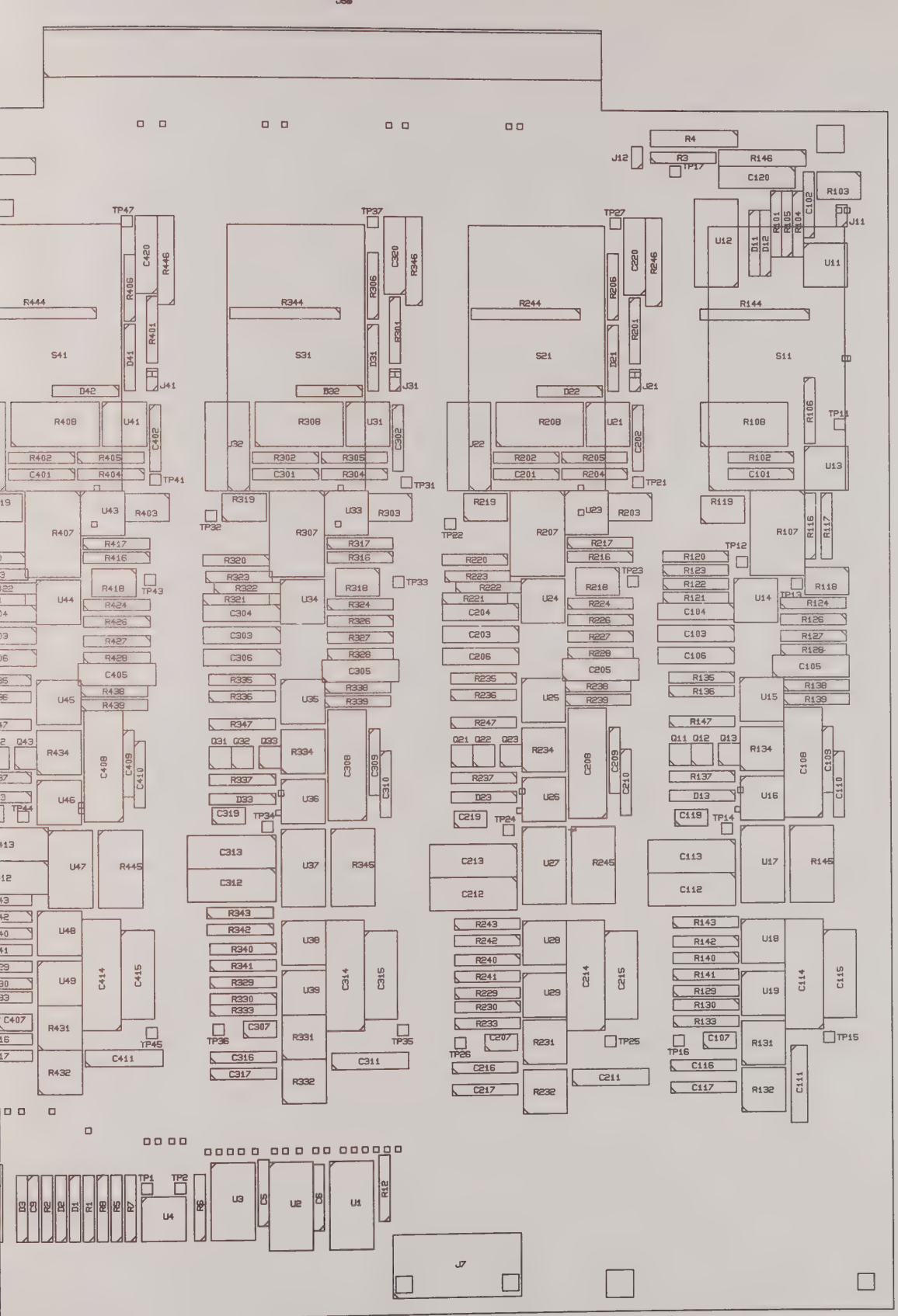
TP47
TP37
TP27
R4
J12
R3
TP17
R146
C120
R103
J11
C102
R101
R105
R104
U12
D11
D12
U11
C420
R446
R406
R401
R444
R344
R306
R301
C320
R346
R244
R206
R201
C220
R246
R144
S41
S31
S21
S11
D41
D31
D21
J41
J31
J21
D42
D32
D22
R408
U41
R308
U31
R208
U21
R108
R106
TP14
C402
C302
C202
J32
J22
R402
R405
R302
R305
R202
R205
R102
U13
C401
R404
C301
R304
C201
R204
C101
TP41
TP31
TP21
R319
R219
R119
U43
R403
U33
R303
U23
R203
R407
R307
R207
R107
R116
R117
TP32
TP22
TP12
R417
R317
R217
R320
R220
R120
R416
R316
R216
R323
R223
R123
R322
R222
R122
R418
TP43
R318
TP33
R218
TP23
U14
R118
TP13
U44
U34
U24
R321
R221
R121
R124
R424
R324
R224
C304
C204
C104
R126
R426
R326
R226
C303
C203
C103
R127
R427
R327
R227
C306
C206
C106
R128
R428
R328
R228
C405
C305
C205
C105
R335
R235
R135
R438
R338
R238
R136
R138
U45
U35
U25
U15
R336
R236
R139
R439
R339
R239
R347
R147
R434
R334
R234
R134
Q31
Q32
Q33
Q21
Q22
Q23
Q11
Q12
Q13
C408
C409
C410
C308
C309
C208
C209
C108
C109
R337
R237
R137
U46
U36
U26
U16
D33
D23
D13
C319
TP34
C219
TP24
C119
TP14
TP44
C313
C213
C113
U47
R445
U37
U27
R245
U17
R145
C312
C212
C112
R343
R243
R143
U48
U38
U28
U18
R342
R242
R142
R340
R240
R140
U49
U39
U29
U19
R341
R241
R141
C414
C415
C314
C315
C214
C215
C114
C115
R329
R229
R129
R330
R230
R130
R339
R233
R133
C407
R431
R331
C307
R231
C207
C107
R131
TP45
TP36
TP35
TP26
TP25
TP16
TP15
C411
C316
C311
C216
C116
C111
R432
R332
C317
C217
C117
R132
C211
TP1
TP2
D3
D9
R2
D2
D1
R1
R8
R5
R7
U4
R6
U3
C5
U2
C6
U1
R12
J7

MULTI-CHANNEL WAVEFORM RECORDER
BOARD ASSEMBLY, ANALOG - 896235-1
FIGURE 6-14 (6 Channel)

SYMBOL NUMBER	PART NUMBER	DESCRIPTION
C3	240352-103	Capacitor, .01 ufd
C5	288755-104	Capacitor, .1 ufd
C6	288755-104	Capacitor, .1 ufd
C7	288755-104	Capacitor, .1 ufd
C8	288755-104	Capacitor, .1 ufd
C9	288755-104	Capacitor, .1 ufd
C10	288755-104	Capacitor, .1 ufd
C201	288755-104	Capacitor, .1 ufd
C202	288755-104	Capacitor, .1 ufd
C203	5-288757-391	Capacitor, 390 pf
C204	5-288755-181	Capacitor, 180 pf
C205	5-288757-271	Capacitor, 270 pf
C206	5-288755181	Capacitor, 180 pf
C207	240352-100	Capacitor, 10 pf
C208	294678-562	Capacitor, 5600 pf
C209	288755-104	Capacitor, .1 ufd
C210	288755-104	Capacitor, .1 ufd
C211	262956-226	Capacitor, 22 ufd
C212	5-125904-472	Capacitor, 4700 pf
C213	5-125904-472	Capacitor, 4700 pf
C214	5-125904-103	Capacitor, .01 ufd
C215	5-125904-222	Capacitor, 2200 pf
C216	288755-104	Capacitor, .1 ufd
C217	288755-104	Capacitor, .1 ufd
C219	240352-100	Capacitor, 10 pf
C220	5-288755-181	Capacitor, 180 pf
C301	288755-104	Capacitor, .1 ufd
C302	288755-104	Capacitor, .1 ufd
C303	5-288757-391	Capacitor, 390 pf
C304	5-288755-181	Capacitor, 180 pf
C305	5-288757-271	Capacitor, 270 pf
C306	5-288755-181	Capacitor, 180 pf
C307	240352-100	Capacitor, 10 pf
C308	294678-562	Capacitor, 5600 pf
C309	288755-104	Capacitor, .1 ufd
C310	288755-104	Capacitor, .1 ufd
C311	262956-226	Capacitor, 22 ufd
C312	5-125904-472	Capacitor, 4700 pf
C314	5-125904-103	Capacitor, .01 ufd
C315	5-125904-222	Capacitor, 2200 pf

MULTI-CHANNEL WAVEFORM RECORDER
BOARD ASSEMBLY, ANALOG - 896235-1
FIGURE 6-14 (6 Channel) (Continued)

SYMBOL NUMBER	PART NUMBER	DESCRIPTION
C316	288755-104	Capacitor, .1 ufd
C317	288755-104	Capacitor, .1 ufd
C319	240352-100	Capacitor, 10 pf
C320	5-288755-181	Capacitor, 180 pf
C401	288755-104	Capacitor, .1 ufd
C402	288755-104	Capacitor, .1 ufd
C403	5-288757-391	Capacitor, 390 pf
C404	5-288755-181	Capacitor, 180 pf
C405	5-288757-271	Capacitor, 270 pf
C406	5-288755-181	Capacitor, 180 pf
C407	240352-100	Capacitor, 10 pf
C408	294678-562	Capacitor, 5600 pf
C409	288755-104	Capacitor, .1 ufd
C410	288755-104	Capacitor, .1 ufd
C411	262956-226	Capacitor, 22 ufd
C412	5-125904-472	Capacitor, 4700 pf
C413	5-125904-472	Capacitor, 4700 pf
C414	5-125904-103	Capacitor, .01 ufd
C415	5-125904-222	Capacitor, 2200 pf
C416	288755-104	Capacitor, .1 ufd
C417	288755-104	Capacitor, .1 ufd
C419	240352-100	Capacitor, 10 pf
C420	5-288755-181	Capacitor, 180 pf
C501	288755-104	Capacitor, .1 ufd
C502	288755-104	Capacitor, .1 ufd
C503	5-288757-271	Capacitor, 270 pf
C504	5-288755-181	Capacitor, 180 pf
C505	5-288757-271	Capacitor, 270 pf
C506	5-288755-181	Capacitor, 180 pf
C507	240352-100	Capacitor, 10 pf
C508	294678-562	Capacitor, 5600 pf
C509	288755-104	Capacitor, .1 ufd
C510	288755-104	Capacitor, .1 ufd
C511	262956-226	Capacitor, 22 ufd
C512	5-125904-472	Capacitor, 4700 pf
C513	5-125904-472	Capacitor, 4700 pf
C514	5-125904-103	Capacitor, .01 ufd
C515	5-125904-222	Capacitor, 2200 pf
C516	288755-104	Capacitor, .1 ufd
C517	288755-104	Capacitor, .1 ufd

MULTI-CHANNEL WAVEFORM RECORDER
BOARD ASSEMBLY, ANALOG - 896235-1
FIGURE 6-14 (6 Channel) (Continued)

SYMBOL NUMBER	PART NUMBER	DESCRIPTION
C519	240352-100	Capacitor, 10 pf
C520	5-288755-181	Capacitor, 180 pf
C601	288755-104	Capacitor, .1 ufd
C602	288755-104	Capacitor, .1 ufd
C603	5-288757-391	Capacitor, 390 pf
C604	5-288755-181	Capacitor, 180 pf
C605	5-288757-271	Capacitor, 270 pf
C606	5-288755-181	Capacitor, 180 pf
C607	240352-100	Capacitor, 10 pf
C608	294678-562	Capacitor, 5600 pf
C609	288755-104	Capacitor, .1 ufd
C610	288755-104	Capacitor, .1 ufd
C611	262956-226	Capacitor, 22 ufd
C612	5-125904-472	Capacitor, 4700 pf
C613	5-125904-472	Capacitor, 4700 pf
C614	5-125904-103	Capacitor, .01 ufd
C615	5-125904-222	Capacitor, 2200 pf
C616	288755-104	Capacitor, .1 ufd
C617	288755-104	Capacitor, .1 ufd
C619	240352-100	Capacitor, 10 pf
C620	5-288755-181	Capacitor, 180 pf
C701	288755-104	Capacitor, .1 ufd
C702	288755-104	Capacitor, .1 ufd
C703	5-288757-391	Capacitor 390 pf
C704	5-288755-181	Capacitor, 180 pf
C705	5-288757-271	Capacitor, 270 pf
C706	5-288755-181	Capacitor, 180 pf
C707	240352-100	Capacitor, 10 pf
C708	294678-562	Capacitor, 5600 pf
C709	288755-104	Capacitor, .1 ufd
C710	288755-104	Capacitor, .1 ufd
C711	262956-226	Capacitor, 22 ufd
C712	5-125904-472	Capacitor, 4700 pf
C713	5-125904-472	Capacitor, 4700 pf
C714	5-125904-103	Capacitor, .01 ufd
C715	5-125904-222	Capacitor, 2200 pf
C716	288755-104	Capacitor, .1 ufd
C717	288755-104	Capacitor, .1 ufd
C719	240352-100	Capacitor, 10 pf
C720	5-288755-181	Capacitor, 180 pf

MULTI-CHANNEL WAVEFORM RECORDER
BOARD ASSEMBLY, ANALOG - 896235-1
FIGURE 6-14 (6 Channel) (Continued)

SYMBOL NUMBER	PART NUMBER	DESCRIPTION
D1	1-230061-8	Diode, 1N4148
D2	1-230061-8	Diode, 1N4148
D3	291152	Zener Diode, 1N753A
D21	288072	Diode, 1N3595
D22	288072	Diode, 1N3595
D23	280440	Diode, 1N4148
D31	288072	Diode, 1N3595
D32	288072	Diode, 1N3595
D33	280440	Diode, 1N4148
D41	288072	Diode, 1N3595
D42	288072	Diode, 1N3595
D43	280440	Diode, 1N4148
D51	288072	Diode, 1N3595
D52	288072	Diode, 1N3595
D53	280440	Diode, 1N4148
D61	288072	Diode, 1N3595
D62	288072	Diode, 1N3595
D63	280440	Diode, 1N4148
D71	288072	Diode, 1N3595
D72	288072	Diode, 1N3595
D73	280440	Diode, 1N4148
J6	296509-9	Connector
J7	296509-9	Connector
J11	1-293893-2	Connector
J21	1-293893-2	Connector
J31	1-293893-2	Connector
J41	1-293893-2	Connector
J51	1-293893-2	Connector
J61	1-293893-2	Connector
J71	1-293893-2	Connector
J81	1-293893-2	Connector
Q13	281292-3	Transistor, 2N4393
Q23	281292-3	Transistor, 2N4393
Q33	281292-3	Transistor, 2N4393
Q43	281292-3	Transistor, 2N4393
Q53	281292-3	Transistor, 2N4393
Q63	281292-3	Transistor, 2N4393
Q73	281292-3	Transistor, 2N4393
Q83	281292-3	Transistor, 2N4393
R1	5-241111-512	Resistor, 5.1 Kohm
R2	5-241111-512	Resistor, 5.1 Kohm
R3	1-265969-47001	Resistor, 47 Kohm
R4	25-265969-70000	Resistor, 7 Kohm
R5	1-288308-29000	Resistor, 2.9 Kohm
R6	1-288308-50000	Resistor, 5 Kohm

MULTI-CHANNEL WAVEFORM RECORDER
BOARD ASSEMBLY, ANALOG - 896235-1
FIGURE 6-14 (6 Channel) (Continued)

SYMBOL NUMBER	PART NUMBER	DESCRIPTION
R7	1-288308-51000	Resistor, 5.1 Kohm
R8	1-288308-5000	Resistor, 5 Kohm
R9	5-115557-226	Resistor, 22 Megohm
R10	5-241111-222	Resistor, 2.2 Kohm
R11	5-241111-222	Resistor, 2.2 Kohm
R12	5-241111-222	Resistor, 2.2 Kohm
R201	1-288308-10001	Resistor, 10 Kohm
R301	1-288308-10001	Resistor, 10 Kohm
R401	1-288308-10001	Resistor, 10 Kohm
R501	1-288308-10001	Resistor, 10 Kohm
R601	1-288308-10001	Resistor, 10 Kohm
R701	1-288308-10001	Resistor, 10 Kohm
R202	5-241111-101	Resistor, 100 ohm
R302	5-241111-101	Resistor, 100 ohm
R402	5-241111-101	Resistor, 100 ohm
R502	5-241111-101	Resistor, 100 ohm
R602	5-241111-101	Resistor, 100 ohm
R702	5-241111-101	Resistor, 100 ohm
R203	269085-103	Resistor, Variable, 10 Kohm
R303	269085-103	Resistor, Variable, 10 Kohm
R403	269085-103	Resistor, Variable, 10 Kohm
R503	269085-103	Resistor, Variable, 10 Kohm
R603	269085-103	Resistor, Variable, 10 Kohm
R703	269085-103	Resistor, Variable, 10 Kohm
R204	1-288308-20001	Resistor, 20 Kohm
R304	1-288308-20001	Resistor, 20 Kohm
R404	1-288308-20001	Resistor, 20 Kohm
R504	1-288308-20001	Resistor, 20 Kohm
R604	1-288308-20001	Resistor, 20 Kohm
R704	1-288308-20001	Resistor, 20 Kohm
R205	1-288308-10001	Resistor, 10 Kohm
R305	1-288308-10001	Resistor, 10 Kohm
R405	1-288308-10001	Resistor, 10 Kohm
R505	1-288308-10001	Resistor, 10 Kohm
R605	1-288308-10001	Resistor, 10 Kohm
R705	1-288308-10001	Resistor, 10 Kohm
R206	5-241111-101	Resistor, 100 ohm
R306	5-241111-101	Resistor, 100 ohm
R406	5-241111-101	Resistor, 100 ohm
R506	5-241111-101	Resistor, 100 ohm

MULTI-CHANNEL WAVEFORM RECORDER
BOARD ASSEMBLY, ANALOG - 896235-1
FIGURE 6-14 (6 Channel) (Continued)

SYMBOL NUMBER	PART NUMBER	DESCRIPTION
R606	5-241111-101	Resistor, 100 ohm
R706	5-241111-101	Resistor, 100 ohm
R208	1-288481	Resistor Network, 100 ohm - 90 Kohm
R308	1-288481	Resistor Network, 100 ohm - 90 Kohm
R408	1-288481	Resistor Network, 100 ohm - 90 Kohm
R508	1-288481	Resistor Network, 100 ohm - 90 Kohm
R608	1-288481	Resistor Network, 100 ohm - 90 Kohm
R708	1-288481	Resistor Network, 100 ohm - 90 Kohm
R216	1-288308-12500	Resistor, 1.25 Kohm
R316	1-288308-12500	Resistor, 1.25 Kohm
R416	1-288308-12500	Resistor, 1.25 Kohm
R516	1-288308-12500	Resistor, 1.25 Kohm
R616	1-288308-12500	Resistor, 1.25 Kohm
R716	1-288308-12500	Resistor, 1.25 Kohm
R217	1-288308-10001	Resistor, 10 Kohm
R317	1-288308-10001	Resistor, 10 Kohm
R417	1-288308-10001	Resistor, 10 Kohm
R517	1-288308-10001	Resistor, 10 Kohm
R617	1-288308-10001	Resistor, 10 Kohm
R717	1-288308-10001	Resistor, 10 Kohm
R218	269085-202	Resistor, Variable, 2 Kohm
R318	269085-202	Resistor, Variable, 2 Kohm
R418	269085-202	Resistor, Variable, 2 Kohm
R518	269085-202	Resistor, Variable, 2 Kohm
R618	269085-202	Resistor, Variable, 2 Kohm
R718	269085-202	Resistor, Variable, 2 Kohm
R818	269085-202	Resistor, Variable, 2 Kohm
R219	269085-103	Resistor, Variable, 10 Kohm
R319	269085-103	Resistor, Variable, 10 Kohm
R419	269085-103	Resistor, Variable, 10 Kohm
R519	269085-103	Resistor, Variable, 10 Kohm
R619	269085-103	Resistor, Variable, 10 Kohm
R719	269085-103	Resistor, Variable, 10 Kohm
R220	1-288308-25000	Resistor, 2.5 Kohm
R220	1-288308-25000	Resistor, 2.5 Kohm
R220	1-288308-25000	Resistor, 2.5 Kohm
R320	1-288308-25000	Resistor, 2.5 Kohm
R420	1-288308-25000	Resistor, 2.5 Kohm
R520	1-288308-25000	Resistor, 2.5 Kohm
R620	1-288308-25000	Resistor, 2.5 Kohm

SYMBOL NUMBER	PART NUMBER	DESCRIPTION
R720	1-288308-25000	Resistor, 2.5 Kohm
R221	1-288308-25000	Resistor, 2.5 Kohm
R321	1-288308-25000	Resistor, 2.5 Kohm
R421	1-288308-25000	Resistor, 2.5 Kohm
R521	1-288308-25000	Resistor, 2.5 Kohm
R621	1-288308-25000	Resistor, 2.5 Kohm
R721	1-288308-25000	Resistor, 2.5 Kohm
R222	1-288308-10001	Resistor, 10 Kohm
R322	1-288308-10001	Resistor, 10 Kohm
R422	1-288308-10001	Resistor, 10 Kohm
R522	1-288308-10001	Resistor, 10 Kohm
R622	1-288308-10001	Resistor, 10 Kohm
R722	1-288308-10001	Resistor, 10 Kohm
R223	1-288308-10001	Resistor, 10 Kohm
R323	1-288308-10001	Resistor, 10 Kohm
R423	1-288308-10001	Resistor, 10 Kohm
R523	1-288308-10001	Resistor, 10 Kohm
R623	1-288308-10001	Resistor, 10 Kohm
R723	1-288308-10001	Resistor, 10 Kohm
R224	1-288308-25000	Resistor, 2.5 Kohm
R324	1-288308-25000	Resistor, 2.5 Kohm
R424	1-288308-25000	Resistor, 2.5 Kohm
R524	1-288308-25000	Resistor, 2.5 Kohm
R624	1-288308-25000	Resistor, 2.5 Kohm
R724	1-288308-25000	Resistor, 2.5 Kohm
R226	1-288308-25000	Resistor, 2.5 Kohm
R326	1-288308-25000	Resistor, 2.5 Kohm
R426	1-288308-25000	Resistor, 2.5 Kohm
R526	1-288308-25000	Resistor, 2.5 Kohm
R626	1-288308-25000	Resistor, 2.5 Kohm
R726	1-288308-25000	Resistor, 2.5 Kohm
R227	1-288308-10001	Resistor, 10 Kohm
R327	1-288308-10001	Resistor, 10 Kohm
R427	1-288308-10001	Resistor, 10 Kohm
R527	1-288308-10001	Resistor, 10 Kohm
R627	1-288308-10001	Resistor, 10 Kohm
R727	1-288308-10001	Resistor, 10 Kohm
R228	1-288308-10001	Resistor, 10 Kohm
R328	1-288308-10001	Resistor, 10 Kohm
R428	1-288308-10001	Resistor, 10 Kohm

MULTI-CHANNEL WAVEFORM RECORDER
BOARD ASSEMBLY, ANALOG - 896235-1
FIGURE 6-14 (6 Channel) (Continued)

SYMBOL NUMBER	PART NUMBER	DESCRIPTION
R528	1-288308-10001	Resistor, 10 Kohm
R628	1-288308-10001	Resistor, 10 Kohm
R728	1-288308-10001	Resistor, 10 Kohm
R229	1-288308-15151	Resistor, 1.515 Kohm
R329	1-288308-15151	Resistor, 1.515 Kohm
R429	1-288308-15151	Resistor, 1.515 Kohm
R529	1-288308-15151	Resistor, 1.515 Kohm
R629	1-288308-15151	Resistor, 1.515 Kohm
R729	1-288308-15151	Resistor, 1.515 Kohm
R230	1-288308-10001	Resistor, 10 Kohm
R330	1-288308-10001	Resistor, 10 Kohm
R430	1-288308-10001	Resistor, 10 Kohm
R530	1-288308-10001	Resistor, 10 Kohm
R630	1-288308-10001	Resistor, 10 Kohm
R730	1-288308-10001	Resistor, 10 Kohm
R231	284878-102	Resistor, 1 Kohm
R331	284878-102	Resistor, 1 Kohm
R431	284878-102	Resistor, 1 Kohm
R531	284878-102	Resistor, 1 Kohm
R631	284878-102	Resistor, 1 Kohm
R731	284878-102	Resistor, 1 Kohm
R232	284878-103	Resistor, 10 Kohm
R332	284878-103	Resistor, 10 Kohm
R432	284878-103	Resistor, 10 Kohm
R532	284878-103	Resistor, 10 Kohm
R632	284878-103	Resistor, 10 Kohm
R732	284878-103	Resistor, 10 Kohm
R233	5-241111-151	Resistor, 150 ohm
R333	5-241111-151	Resistor, 150 ohm
R433	5-241111-151	Resistor, 150 ohm
R533	5-241111-151	Resistor, 150 ohm
R633	5-241111-151	Resistor, 150 ohm
R733	5-241111-151	Resistor, 150 ohm
R234	284878-103	Resistor, 10 Kohm
R334	284878-103	Resistor, 10 Kohm
R434	284878-103	Resistor, 10 Kohm
R534	284878-103	Resistor, 10 Kohm
R634	284878-103	Resistor, 10 Kohm
R734	284878-103	Resistor, 10 Kohm
R235	5-241111-103	Resistor, 10 Kohm

MULTI-CHANNEL WAVEFORM RECORDER
BOARD ASSEMBLY, ANALOG - 896235-1
FIGURE 6-14 (6 Channel) (Continued)

SYMBOL NUMBER	PART NUMBER	DESCRIPTION
R335	5-241111-103	Resistor, 10 Kohm
R435	5-241111-103	Resistor, 10 Kohm
R535	5-241111-103	Resistor, 10 Kohm
R635	5-241111-103	Resistor, 10 Kohm
R735	5-241111-103	Resistor, 10 Kohm
R236	5-241111-301	Resistor, 300 ohm
R336	5-241111-301	Resistor, 300 ohm
R436	5-241111-301	Resistor, 300 ohm
R536	5-241111-301	Resistor, 300 ohm
R636	5-241111-301	Resistor, 300 ohm
R736	5-241111-301	Resistor, 300 ohm
R237	5-241111-203	Resistor, 20 Kohm
R337	5-241111-203	Resistor, 20 Kohm
R437	5-241111-203	Resistor, 20 Kohm
R537	5-241111-203	Resistor, 20 Kohm
R637	5-241111-203	Resistor, 20 Kohm
R737	5-241111-203	Resistor, 20 Kohm
R238	5-241111-470	Resistor, 47 ohm
R338	5-241111-470	Resistor, 47 ohm
R438	5-241111-470	Resistor, 47 ohm
R538	5-241111-470	Resistor, 47 ohm
R638	5-241111-470	Resistor, 47 ohm
R738	5-241111-470	Resistor, 47 ohm
R239	5-241111-470	Resistor, 47 ohm
R339	5-241111-470	Resistor, 47 ohm
R439	5-241111-470	Resistor, 47 ohm
R539	5-241111-470	Resistor, 47 ohm
R639	5-241111-470	Resistor, 47 ohm
R739	5-241111-470	Resistor, 47 ohm
R240	1-288308-35702	Resistor, 357 Kohm
R340	1-288308-35702	Resistor, 357 Kohm
R440	1-288308-35702	Resistor, 357 Kohm
R540	1-288308-35702	Resistor, 357 Kohm
R640	1-288308-35702	Resistor, 357 Kohm
R740	1-288308-35702	Resistor, 357 Kohm

MULTI-CHANNEL WAVEFORM RECORDER
BOARD ASSEMBLY, ANALOG - 896235-1
FIGURE 6-14 (6 Channel) (Continued)

SYMBOL NUMBER	PART NUMBER	DESCRIPTION
R241	1-288308-35702	Resistor, 357 Kohm
R341	1-288308-35702	Resistor, 357 Kohm
R441	1-288308-35702	Resistor, 357 Kohm
R541	1-288308-35702	Resistor, 357 Kohm
R641	1-288308-35702	Resistor, 357 Kohm
R741	1-288308-35702	Resistor, 357 Kohm
R841	1-288308-35702	Resistor, 357 Kohm
R242	1-288308-27402	Resistor, 274 Kohm
R342	1-288308-27402	Resistor, 274 Kohm
R442	1-288308-27402	Resistor, 274 Kohm
R542	1-288308-27402	Resistor, 274 Kohm
R642	1-288308-27402	Resistor, 274 Kohm
R742	1-288308-27402	Resistor, 274 Kohm
R243	1-288308-30002	Resistor, 300 Kohm
R343	1-288308-30002	Resistor, 300 Kohm
R443	1-288308-30002	Resistor, 300 Kohm
R543	1-288308-30002	Resistor, 300 Kohm
R643	1-288308-30002	Resistor, 300 Kohm
R743	1-288308-30002	Resistor, 300 Kohm
R244	2965111-222	Resistor, 2.2 Kohm
R344	2965111-222	Resistor, 2.2 Kohm
R444	2965111-222	Resistor, 2.2 Kohm
R544	2965111-222	Resistor, 2.2 Kohm
R644	2965111-222	Resistor, 2.2 Kohm
R744	2965111-222	Resistor, 2.2 Kohm
R246	5-115557-1RB	Resistor, 1.8 ohm
R346	5-115557-1RB	Resistor, 1.8 ohm
R446	5-115557-1RB	Resistor, 1.8 ohm
R546	5-115557-1RB	Resistor, 1.8 ohm
R646	5-115557-1RB	Resistor, 1.8 ohm
R746	5-115557-1RB	Resistor, 1.8 ohm
S1	289742	Switch
U1	290169-123	I.C., 74LS123
U2	290169-123	I.C., 74LS123
U3	291235-9	I.C., 7409
U4	283948	I.C., MC1458P
U5	296276	I.C., MC1488L
U6	296276	I.C., MC1488L
U7	291235-9	I.C., 7409
U8	290169-123	I.C., 74LS123

MULTI-CHANNEL WAVEFORM RECORDER
BOARD ASSEMBLY, ANALOG - 896235-1
FIGURE 6-14 (6 Channel) (Continued)

SYMBOL NUMBER	PART NUMBER	DESCRIPTION
U9	290169-123	I.C., 74LS123
U21	294181-3	I.C., AD41320
U22	290169-148	I.C., 74LS148
U23	296275-1	I.C., LF411ACN
U24	296119-1	I.C., LF412ACN
U25	296275-2	I.C., LF411CN
U26	296275-2	I.C., LF411CN
U27	296120	I.C., LM319
U28	296119-2	I.C., LF412CN
U29	296275-2	I.C., LF411CN
U31	294181-3	I.C., AD41320
U32	290169-148	I.C., 74LS148
U33	296275-1	I.C., LF411ACN
U34	296119-1	I.C., LF412ACN
U35	296275-2	I.C., LF411CN
U36	296275-2	I.C., LF411CN
U37	296120	I.C., LM319
U38	296119-2	I.C., LF412CN
U39	296275-2	I.C., LF411CN
U41	294181-3	I.C., AD41320
U42	290169-148	I.C., 74LS148
U43	296275-1	I.C., LF411ACN
U44	296119-1	I.C., LF412ACN
U45	296275-2	I.C., LF411CN
U46	296275-2	I.C., LF411CN
U47	296120	I.C., LM319
U48	296119-2	I.C., LF412CN
U49	296275-2	I.C., LF411CN
U51	294181-3	I.C., AD41320
U52	290169-148	I.C., 74LS148
U53	296275-1	I.C., LF411ACN
U54	296119-1	I.C., LF412ACN
U55	296275-2	I.C., LF411CN
U56	296275-2	I.C., LF411CN
U57	296120	I.C., LM319
U58	296119-2	I.C., LF412CN
U59	296275-2	I.C., LF411CN
U61	294181-3	I.C., AD41320
U62	290169-148	I.C., 74LS148

SYMBOL NUMBER	PART NUMBER	DESCRIPTION
U63	296275-1	I.C., LF411ACN
U64	296119-1	I.C., LF412ACN
U65	296275-2	I.C., LF411CN
U66	296275-2	I.C., LF411CN
U67	296120	I.C., LM319
U68	296119-2	I.C., LF412CN
U69	296275-2	I.C., LF411CN
U71	294181-3	I.C., AD41320
U72	290169-148	I.C., 74LS148
U73	296275-1	I.C., LF411ACN
U74	296119-1	I.C., LF412ACN
U75	296275-2	I.C., LF411CN
U76	296275-2	I.C., LF411CN
U77	296120	I.C., LM319
U78	296119-2	I.C., LF412CN
U79	296275-2	I.C., LF411CN

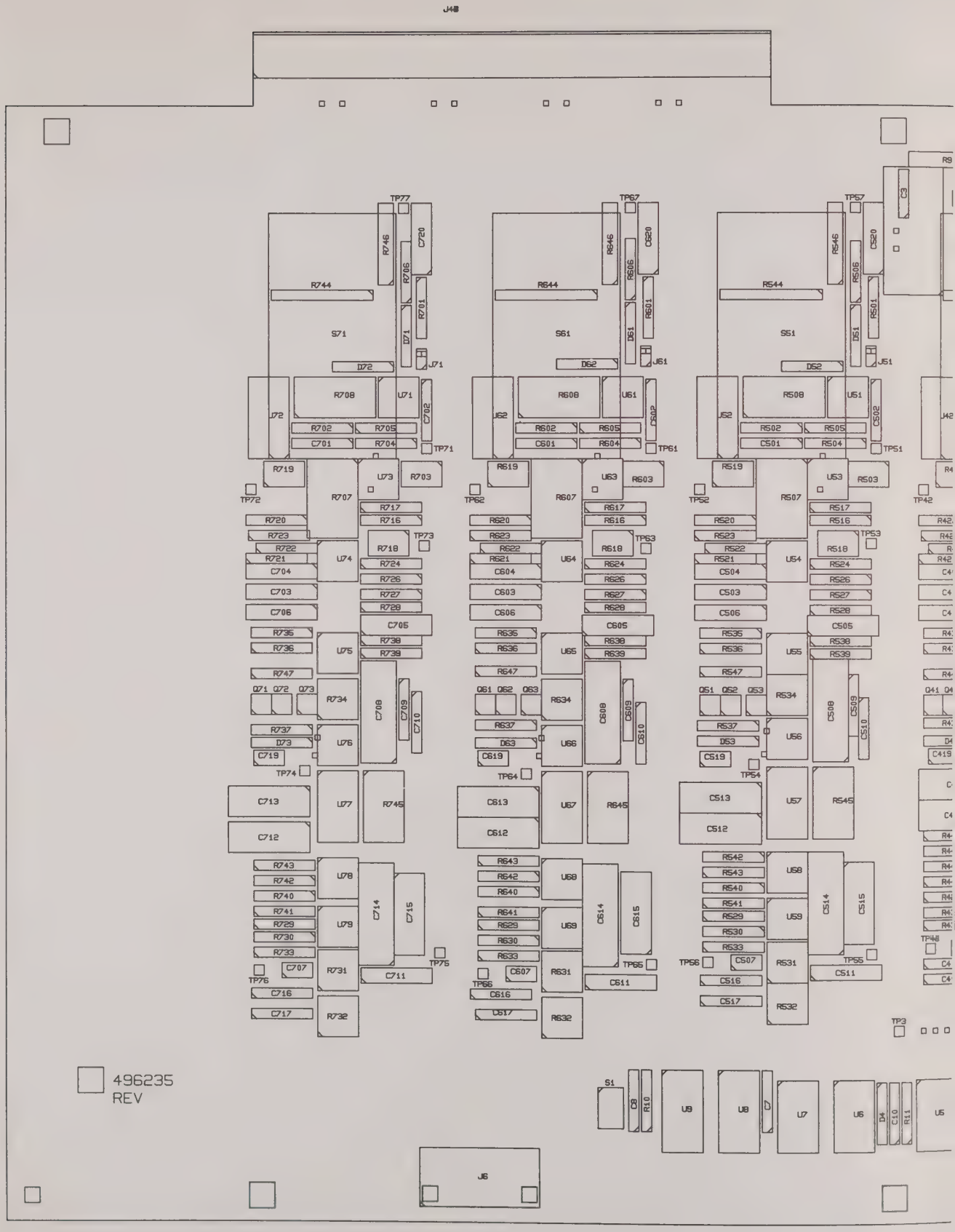

FIGURE 6-14 BOARD ASSEMBLY, ANAL

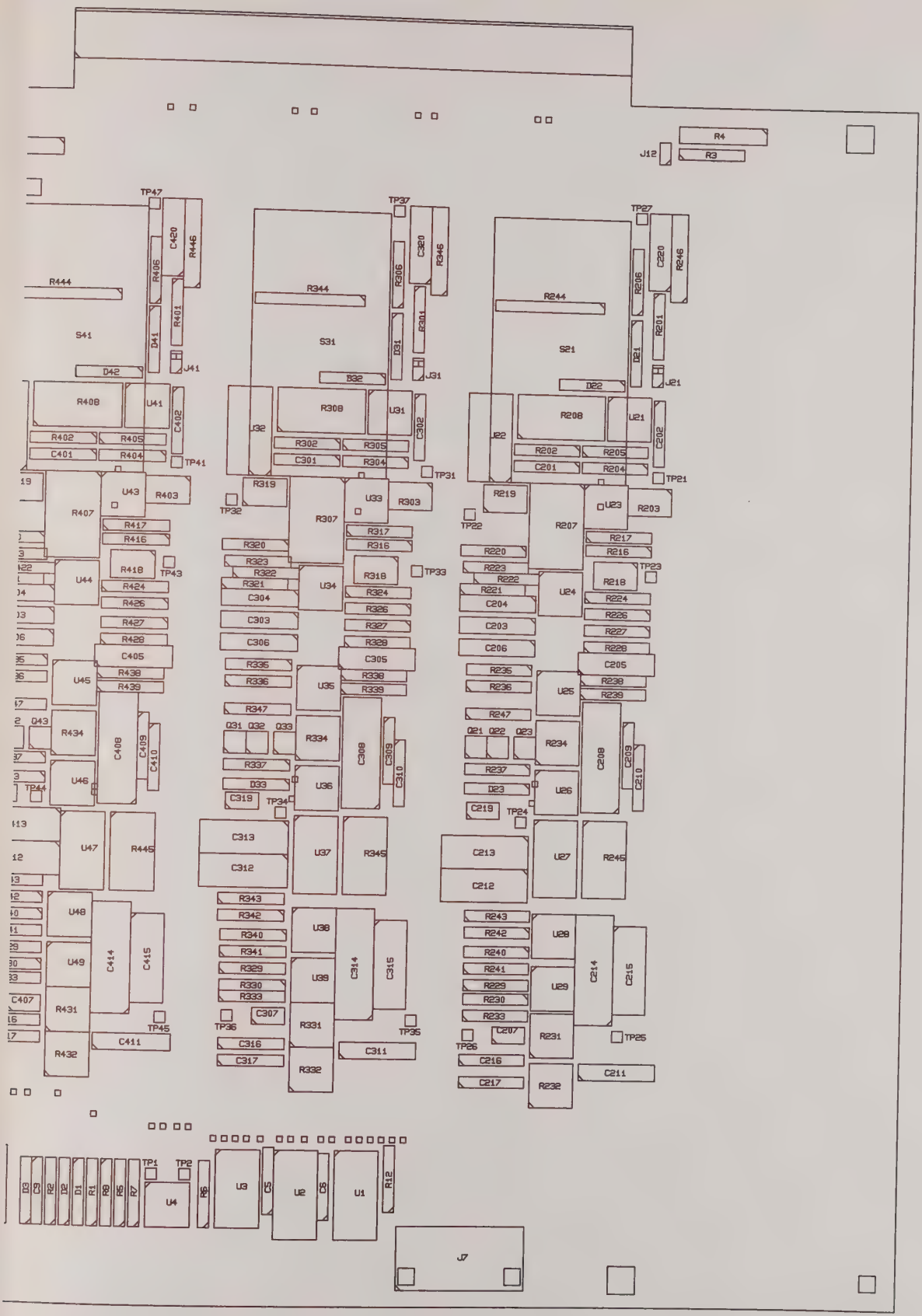
J12
R4
R3
TP47
C420
R446
R444
R406
R401
S41
D41
J41
D42
R408
U41
C402
R402
R405
C401
R404
TP41
R407
U43
R403
R417
R416
R418
TP43
U44
R424
R426
R427
R428
C405
R438
R439
U45
R434
C408
C409
C410
Q43
U46
TP44
U47
R445
U48
U49
C414
C415
C407
R431
TP45
R432
C411
TP37
C320
R345
R344
R306
R301
S31
D31
J31
D32
R308
U31
C302
J32
R302
R305
C301
R304
TP31
TP32
R319
R307
U33
R303
R317
R316
R320
R323
R322
R321
C304
U34
R318
TP33
R324
R326
R327
R328
C303
C306
C305
R335
R336
U35
R338
R339
R347
Q31
Q32
Q33
R334
C308
C309
C310
R337
D33
U36
C319
TP34
C313
C312
U37
R345
R343
R342
R340
R341
R329
R330
R333
U38
U39
C314
C315
C307
TP36
R331
TP35
C316
C317
R332
C311
TP27
R244
R206
C220
R246
S21
D21
R201
J21
D22
R208
U21
C202
J22
R202
R205
C201
R204
TP21
R219
U23
R203
TP22
R207
R217
R220
R216
R223
R222
R218
TP23
R221
U24
R224
C204
R226
C203
R227
C206
R228
C205
R235
R238
R236
U25
R239
R247
Q21
Q22
Q23
R234
C208
C209
R237
U26
C210
D23
C219
TP24
C213
C212
U27
R245
R243
R242
U28
R240
R241
U29
C214
C215
R229
R230
R233
C207
R231
TP25
TP26
C216
C217
R232
C211
D3
C9
R2
D2
D1
R1
R8
R5
R7
TP1
TP2
U4
R6
U3
C5
U2
C8
U1
R12
J7

MULTI-CHANNEL WAVEFORM RECORDER
BOARD ASSEMBLY, ANALOG - 896235-2
FIGURE 6-15 (4 Channel)

SYMBOL NUMBER	PART NUMBER	DESCRIPTION
C3	240352-103	Capacitor, .01 ufd
C5	288755-104	Capacitor, .1 ufd
C6	288755-104	Capacitor, .1 ufd
C7	288755-104	Capacitor, .1 ufd
C8	288755-104	Capacitor, .1 ufd
C9	288755-104	Capacitor, .1 ufd
C10	288755-104	Capacitor, .1 ufd
C102	288755-104	Capacitor, .1 ufd
C103	5-288757-271	Capacitor, 390 pf
C104	5-288755-181	Capacitor, 180 pf
C105	5-288755-181	Capacitor, 270 pf
C106	5-288755-181	Capacitor, 180 pf
C107	240352-100	Capacitor, 10 pf
C108	294678-562	Capacitor, 5600 pf
C109	288755-104	Capacitor, .1 ufd
C110	288755-104	Capacitor, .1 ufd
C111	262956-226	Capacitor, 22 ufd
C112	5-125904-472	Capacitor, 4700 pf
C113	5-125904-472	Capacitor, 4700 pf
C114	5-125904-103	Capacitor, .01 ufd
C115	5-125904-222	Capacitor, 2200 pf
C116	288755-104	Capacitor, .1 ufd
C117	288755-104	Capacitor, .1 ufd
C119	240352-100	Capacitor, 10 pf
C120	5-288755-181	Capacitor, 180 pf
C301	288755-104	Capacitor, .1 ufd
C302	288755-104	Capacitor, .1 ufd
C303	5-288757-391	Capacitor, 390 pf
C304	5-288755-181	Capacitor, 180 pf
C305	5-288757-271	Capacitor, 270 pf
C306	5-288755-181	Capacitor, 180 pf
C307	240352-100	Capacitor, 10 pf
C308	294678-562	Capacitor, 5600 pf
C309	288755-104	Capacitor, .1 ufd
C310	288755-104	Capacitor, .1 ufd
C311	262956-226	Capacitor, 22 ufd
C312	5-125904-472	Capacitor, 4700 pf
C314	5-125904-103	Capacitor, .01 ufd
C315	5-125904-222	Capacitor, 2200 pf
C316	288755-104	Capacitor, .1 ufd

MULTI-CHANNEL WAVEFORM RECORDER
BOARD ASSEMBLY, ANALOG - 896235-2
FIGURE 6-15 (4 Channel) (Continued)

SYMBOL NUMBER	PART NUMBER	DESCRIPTION
C317	288755-104	Capacitor, .1 ufd
C319	240352-100	Capacitor, 10 pf
C320	5-288755-181	Capacitor, 180 pf
C401	288755-104	Capacitor, .1 ufd
C402	288755-104	Capacitor, .1 ufd
C601	288755-104	Capacitor, .1 ufd
C602	288755-104	Capacitor, .1 ufd
C603	5-288757-391	Capacitor, 390 pf
C604	5-288755-181	Capacitor, 180 pf
C605	5-288757-271	Capacitor, 270 pf
C606	5-288755-181	Capacitor, 180 pf
C607	240352-100	Capacitor, 10 pf
C608	294678-562	Capacitor, 5600 pf
C609	288755-104	Capacitor, .1 ufd
C610	288755-104	Capacitor, .1 ufd
C611	262956-226	Capacitor, 22 ufd
C612	5-125904-472	Capacitor, 4700 pf
C613	5-125904-472	Capacitor, 4700 pf
C614	5-125904-103	Capacitor, .01 ufd
C615	5-125904-222	Capacitor, 2200 pf
C616	288755-104	Capacitor, .1 ufd
C617	288755-104	Capacitor, .1 ufd
C619	240352-100	Capacitor, 10 pf
C620	5-288755-181	Capacitor, 180 pf
C801	288755-104	Capacitor, .1 ufd
C802	288755-104	Capacitor, .1 ufd
C803	5-288757-391	Capacitor, 390 pf
C804	5-288755-181	Capacitor, 180 pf
C805	5-288757-271	Capacitor, 270 pf
C806	5-288755-181	Capacitor, 180 pf
C807	240352-100	Capacitor, 10 pf
C808	294678-562	Capacitor, 5600 pf
C809	288755-104	Capacitor, .1 ufd
C810	288755-104	Capacitor, .1 ufd
C811	262956-226	Capacitor, 22 ufd
C812	5-125904-472	Capacitor, 4700 pf
C813	5-125904-472	Capacitor, 4700 pf
C814	5-125904-103	Capacitor, .01 ufd
C815	5-125904-222	Capacitor, 2200 pf
C816	288755-104	Capacitor, .1 ufd

MULTI-CHANNEL WAVEFORM RECORDER
BOARD ASSEMBLY, ANALOG - 896235-2
FIGURE 6-15 (4 Channel) (Continued)

SYMBOL NUMBER	PART NUMBER	DESCRIPTION
C817	288755-104	Capacitor, .1 ufd
C819	240352-100	Capacitor, 10 pf
C820	5-288755-181	Capacitor, 180 pf
D1	1-230061-8	Diode, 1N4148
D2	1-230061-8	Diode, 1N4148
D3	291152	Zener Diode, 1N753A
D11	288072	Diode, 1N3595
D12	288072	Diode, 1N3595
D13	280440	Diode, 1N4148
D31	288072	Diode, 1N3595
D32	288072	Diode, 1N3595
D33	280440	Diode, 1N4148
D61	288072	Diode, 1N3595
D62	288072	Diode, 1N3595
D63	280440	Diode, 1N4148
D81	288072	Diode, 1N3595
D82	288072	Diode, 1N3595
D83	280440	Diode, 1N4148
J6	296509-9	Connector
J7	296509-9	Connector
J11	1-293893-2	Connector
J21	1-293893-2	Connector
J31	1-293893-2	Connector
J41	1-293893-2	Connector
J51	1-293893-2	Connector
J61	1-293893-2	Connector
J71	1-293893-2	Connector
J81	1-293893-2	Connector
Q13	281292-3	Transistor, 2N4393
Q23	281292-3	Transistor, 2N4393
Q33	281292-3	Transistor, 2N4393
Q43	281292-3	Transistor, 2N4393
Q53	281292-3	Transistor, 2N4393
Q63	281292-3	Transistor, 2N4393
Q73	281292-3	Transistor, 2N4393
Q83	281292-3	Transistor, 2N4393
R1	5-241111-512	Resistor, 5.1 Kohm
R2	5-241111-512	Resistor, 5.1 Kohm
R3	1-265969-47001	Resistor, 47 Kohm
R4	25-265969-70000	Resistor, 7 Kohm

SYMBOL NUMBER	PART NUMBER	DESCRIPTION
R5	1-288308-29000	Resistor, 2.9 Kohm
R6	1-288308-50000	Resistor, 5 Kohm
R7	1-288308-51000	Resistor, 5.1 Kohm
R8	1-288308-5000	Resistor, 5 Kohm
R9	5-115557-226	Resistor, 22 Megohm
R10	5-241111-222	Resistor, 2.2 Kohm
R11	5-241111-222	Resistor, 2.2 Kohm
R12	5-241111-222	Resistor, 2.2 Kohm
R101	1-288308-10001	Resistor, 10 Kohm
R301	1-288308-10001	Resistor, 10 Kohm
R601	1-288308-10001	Resistor, 10 Kohm
R801	1-288308-10001	Resistor, 10 Kohm
R102	5-241111-101	Resistor, 100 ohm
R302	5-241111-101	Resistor, 100 ohm
R602	5-241111-101	Resistor, 100 ohm
R802	5-241111-101	Resistor, 100 ohm
R103	269085-103	Resistor, Variable, 10 Kohm
R203	269085-103	Resistor, Variable, 10 Kohm
R303	269085-103	Resistor, Variable, 10 Kohm
R603	269085-103	Resistor, Variable, 10 Kohm
R803	269085-103	Resistor, Variable, 10 Kohm
R104	1-288308-20001	Resistor, 20 Kohm
R304	1-288308-20001	Resistor, 20 Kohm
R604	1-288308-20001	Resistor, 20 Kohm
R804	1-288308-20001	Resistor, 20 Kohm
R105	1-288308-10001	Resistor, 10 Kohm
R305	1-288308-10001	Resistor, 10 Kohm
R605	1-288308-10001	Resistor, 10 Kohm
R805	1-288308-10001	Resistor, 10 Kohm
R106	5-241111-101	Resistor, 100 ohm
R306	5-241111-101	Resistor, 100 ohm
R606	5-241111-101	Resistor, 100 ohm
R806	5-241111-101	Resistor, 100 ohm
R108	1-288481	Resistor Network, 100 ohm - 90 Kohm
R308	1-288481	Resistor Network, 100 ohm - 90 Kohm
R608	1-288481	Resistor Network, 100 ohm - 90 Kohm
R808	1-288481	Resistor Network, 100 ohm - 90 Kohm
R116	1-288308-12500	Resistor, 1.25 Kohm
R316	1-288308-12500	Resistor, 1.25 Kohm
R616	1-288308-12500	Resistor, 1.25 Kohm

SYMBOL NUMBER	PART NUMBER	DESCRIPTION
R816	1-288308-12500	Resistor, 1.25 Kohm
R117	1-288308-10001	Resistor, 10 Kohm
R317	1-288308-10001	Resistor, 10 Kohm
R617	1-288308-10001	Resistor, 10 Kohm
R817	1-288308-10001	Resistor, 10 Kohm
R118	269085-202	Resistor, Variable, 2 Kohm
R318	269085-202	Resistor, Variable, 2 Kohm
R618	269085-202	Resistor, Variable, 2 Kohm
R818	269085-202	Resistor, Variable, 2 Kohm
R119	269085-103	Resistor, Variable, 10 Kohm
R319	269085-103	Resistor, Variable, 10 Kohm
R619	269085-103	Resistor, Variable, 10 Kohm
R819	269085-103	Resistor, Variable, 10 Kohm
R120	1-288308-25000	Resistor, 2.5 Kohm
R320	1-288308-25000	Resistor, 2.5 Kohm
R620	1-288308-25000	Resistor, 2.5 Kohm
R820	1-288308-25000	Resistor, 2.5 Kohm
R121	1-288308-25000	Resistor, 2.5 Kohm
R321	1-288308-25000	Resistor, 2.5 Kohm
R621	1-288308-25000	Resistor, 2.5 Kohm
R821	1-288308-25000	Resistor, 2.5 Kohm
R122	1-288308-10001	Resistor, 10 Kohm
R222	1-288308-10001	Resistor, 10 Kohm
R322	1-288308-10001	Resistor, 10 Kohm
R622	1-288308-10001	Resistor, 10 Kohm
R822	1-288308-10001	Resistor, 10 Kohm
R123	1-288308-10001	Resistor, 10 Kohm
R323	1-288308-10001	Resistor, 10 Kohm
R623	1-288308-10001	Resistor, 10 Kohm
R723	1-288308-10001	Resistor, 10 Kohm
R823	1-288308-10001	Resistor, 10 Kohm
R124	1-288308-25000	Resistor, 2.5 Kohm
R324	1-288308-25000	Resistor, 2.5 Kohm
R624	1-288308-25000	Resistor, 2.5 Kohm
R824	1-288308-25000	Resistor, 2.5 Kohm
R126	1-288308-25000	Resistor, 2.5 Kohm
R326	1-288308-25000	Resistor, 2.5 Kohm
R626	1-288308-25000	Resistor, 2.5 Kohm
R826	1-288308-25000	Resistor, 2.5 Kohm
R127	1-288308-10001	Resistor, 10 Kohm

SYMBOL NUMBER	PART NUMBER	DESCRIPTION
R327	1-288308-10001	Resistor, 10 Kohm
R627	1-288308-10001	Resistor, 10 Kohm
R827	1-288308-10001	Resistor, 10 Kohm
R128	1-288308-10001	Resistor, 10 Kohm
R328	1-288308-10001	Resistor, 10 Kohm
R528	1-288308-10001	Resistor, 10 Kohm
R628	1-288308-10001	Resistor, 10 Kohm
R828	1-288308-10001	Resistor, 10 Kohm
R129	1-288308-15151	Resistor, 1.515 Kohm
R329	1-288308-15151	Resistor, 1.515 Kohm
R629	1-288308-15151	Resistor, 1.515 Kohm
R829	1-288308-15151	Resistor, 1.515 Kohm
R130	1-288308-10001	Resistor, 10 Kohm
R330	1-288308-10001	Resistor, 10 Kohm
R630	1-288308-10001	Resistor, 10 Kohm
R830	1-288308-10001	Resistor, 10 Kohm
R131	284878-102	Resistor, 1 Kohm
R331	284878-102	Resistor, 1 Kohm
R631	284878-102	Resistor, 1 Kohm
R831	284878-102	Resistor, 1 Kohm
R132	284878-103	Resistor, 10 Kohm
R332	284878-103	Resistor, 10 Kohm
R632	284878-103	Resistor, 10 Kohm
R832	284878-103	Resistor, 10 Kohm
R133	5-241111-151	Resistor, 150 ohm
R333	5-241111-151	Resistor, 150 ohm
R633	5-241111-151	Resistor, 150 ohm
R833	5-241111-151	Resistor, 150 ohm
R134	284878-103	Resistor, 10 Kohm
R334	284878-103	Resistor, 10 Kohm
R634	284878-103	Resistor, 10 Kohm
R834	284878-103	Resistor, 10 Kohm
R135	5-241111-103	Resistor, 10 Kohm
R335	5-241111-103	Resistor, 10 Kohm
R635	5-241111-103	Resistor, 10 Kohm
R835	5-241111-103	Resistor, 10 Kohm
R136	5-241111-301	Resistor, 300 ohm
R336	5-241111-301	Resistor, 300 ohm
R636	5-241111-301	Resistor, 300 ohm
R836	5-241111-301	Resistor, 300 ohm
R137	5-241111-203	Resistor, 20 Kohm
R337	5-241111-203	Resistor, 20 Kohm
R637	5-241111-203	Resistor, 20 Kohm
R837	5-241111-203	Resistor, 20 Kohm
R138	5-241111-470	Resistor, 47 ohm

MULTI-CHANNEL WAVEFORM RECORDER
BOARD ASSEMBLY, ANALOG - 896235-2
FIGURE 6-15 (4 Channel) (Continued)

SYMBOL NUMBER	PART NUMBER	DESCRIPTION
R338	5-241111-470	Resistor, 47 ohm
R638	5-241111-470	Resistor, 47 ohm
R838	5-241111-470	Resistor, 47 ohm
R139	5-241111-470	Resistor, 47 ohm
R339	5-241111-470	Resistor, 47 ohm
R639	5-241111-470	Resistor, 47 ohm
R839	5-241111-470	Resistor, 47 ohm
R140	1-288308-35702	Resistor, 357 Kohm
R340	1-288308-35702	Resistor, 357 Kohm
R640	1-288308-35702	Resistor, 357 Kohm
R840	1-288308-35702	Resistor, 357 Kohm
R141	1-288308-35702	Resistor, 357 Kohm
R341	1-288308-35702	Resistor, 357 Kohm
R641	1-288308-35702	Resistor, 357 Kohm
R841	1-288308-35702	Resistor, 357 Kohm
R142	1-288308-27402	Resistor, 274 Kohm
R342	1-288308-27402	Resistor, 274 Kohm
R642	1-288308-27402	Resistor, 274 Kohm
R842	1-288308-27402	Resistor, 274 Kohm
R143	1-288308-30002	Resistor, 300 Kohm
R343	1-288308-30002	Resistor, 300 Kohm
R643	1-288308-30002	Resistor, 300 Kohm
R843	1-288308-30002	Resistor, 300 Kohm
R144	2965111-222	Resistor, 2.2 Kohm
R344	2965111-222	Resistor, 2.2 Kohm
R644	2965111-222	Resistor, 2.2 Kohm
R844	2965111-222	Resistor, 2.2 Kohm
R146	5-115557-1RB	Resistor, 1.8 ohm
R346	5-115557-1RB	Resistor, 1.8 ohm
R646	5-115557-1RB	Resistor, 1.8 ohm
R846	5-115557-1RB	Resistor, 1.8 ohm
S1	289742	Switch
U1	290169-123	I.C., 74LS123
U2	290169-123	I.C., 74LS123
U3	291235-9	I.C., 7409
U4	283948	I.C., MC1458P
U5	296276	I.C., MC1488L
U6	296276	I.C., MC1488L
U7	291235-9	I.C., 7409
U8	290169-123	I.C., 74LS123

SYMBOL NUMBER	PART NUMBER	DESCRIPTION
U9	290169-123	I.C., 74LS123
U11	294181-3	I.C., AD41320
U12	290169-148	I.C., 74LS148
U13	296275-1	I.C., LF411ACN
U14	296119-1	I.C., LF412ACN
U15	296275-2	I.C., LF411CN
U16	296275-2	I.C., LF411CN
U17	296120	I.C., LM319
U18	296119-2	I.C., LF412CN
U19	296275-2	I.C., LF411CN
U31	294181-3	I.C., AD41320
U32	290169-148	I.C., 74LS148
U33	296275-1	I.C., LF411ACN
U34	296119-1	I.C., LF412ACN
U35	296275-2	I.C., LF411CN
U36	296275-2	I.C., LF411CN
U37	296120	I.C., LM319
U38	296119-2	I.C., LF412CN
U39	296275-2	I.C., LF411CN
U61	294181-3	I.C., AD41320
U62	290169-148	I.C., 74LS148
U63	296275-1	I.C., LF411ACN
U64	296119-1	I.C., LF412ACN
U65	296275-2	I.C., LF411CN
U66	296275-2	I.C., LF411CN
U67	296120	I.C., LM319
U68	296119-2	I.C., LF412CN
U69	296275-2	I.C., LF411CN
U81	294181-3	I.C., AD41320
U82	290169-148	I.C., 74LS148
U83	296275-1	I.C., LF411ACN
U84	296119-1	I.C., LF412ACN
U85	296275-2	I.C., LF411CN
U86	296275-2	I.C., LF411CN
U87	296120	I.C., LM319
U88	296119-2	I.C., LF412CN
U89	296275-2	I.C., LF411CN

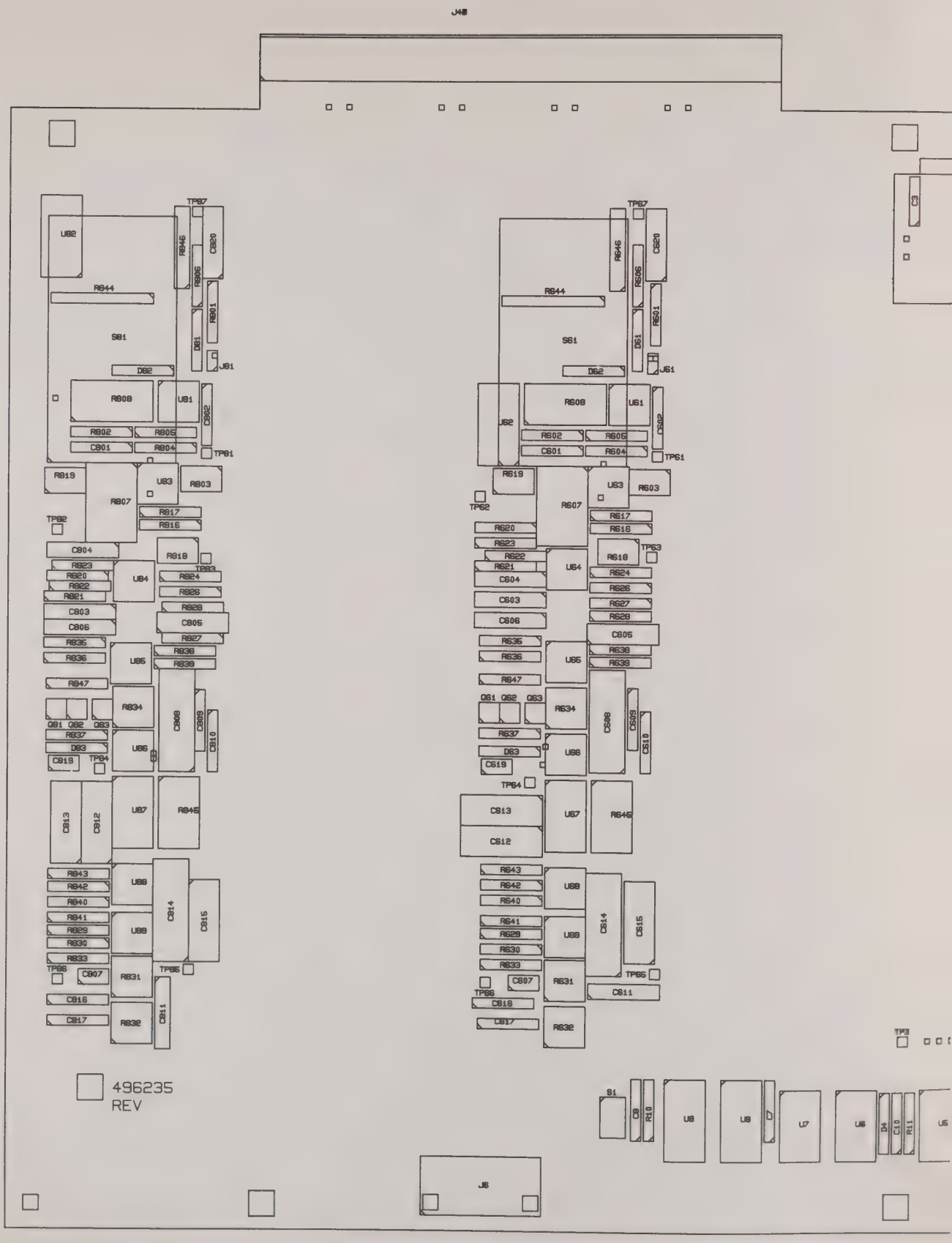

496235
REV

FIGURE 6-15 BOARD ASSEMBLY, ANAL

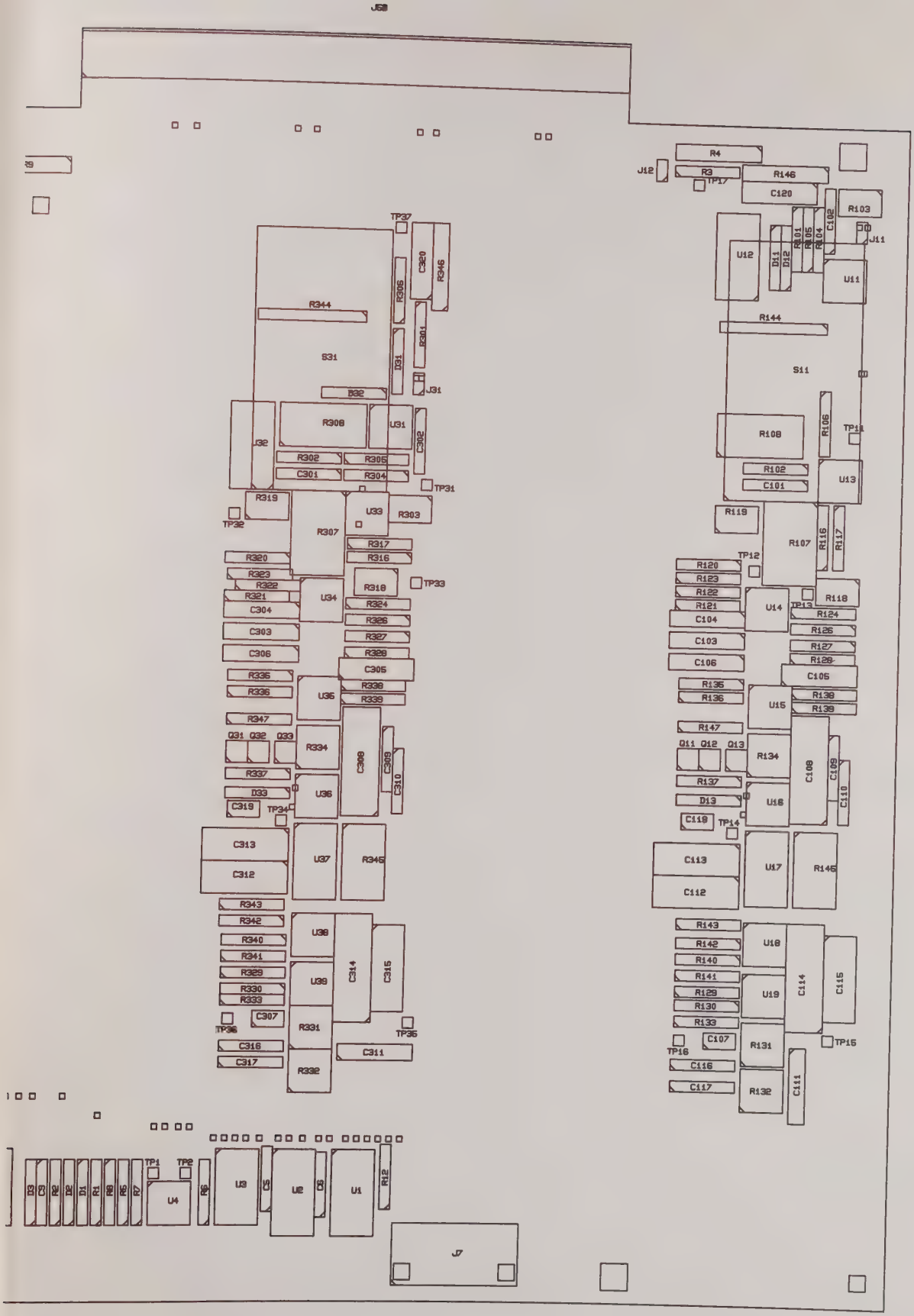
J38
R4
J12
R3
TP17
R146
C120
R103
C102
J11
U12
D11
D12
R101
R105
R104
U11
TP37
C320
R346
R305
R344
R301
S31
D31
J31
D32
R308
U31
J32
C302
R302
R305
C301
R304
TP31
R319
TP32
U33
R303
R307
R317
R316
R320
R323
R322
R321
C304
R318
TP33
U34
R324
C303
R326
R327
C306
R328
C305
R335
R336
R338
R339
U35
R347
Q31
Q32
Q33
R334
C309
C308
C310
R337
D33
C319
TP34
U36
C313
C312
U37
R345
R343
R342
R340
R341
R329
R330
R333
U38
U39
C314
C315
C307
TP36
R331
TP35
C316
C317
C311
R332
R144
S11
R108
R106
TP11
R102
C101
U13
R119
R107
R116
R117
TP12
R120
R123
R122
R121
C104
U14
TP13
R118
R124
R126
C103
R127
R128
C106
C105
R135
R136
U15
R138
R139
R147
Q11
Q12
Q13
R134
C108
C109
R137
D13
U16
C110
C119
TP14
C113
C112
U17
R145
R143
R142
R140
R141
R129
R130
R133
U18
U19
C114
C115
C107
TP16
R131
TP15
C116
C117
R132
C111
D3
D2
D1
R8
R6
R7
TP1
TP2
U4
R9
U3
C5
U2
C6
U1
R12
J7

MULTI-CHANNEL WAVEFORM RECORDER
INTER-CONNECT BOARD ASSEMBLY - 896234
FIGURE 6-16

SYMBOL NUMBER	PART NUMBER	DESCRIPTION
C1	294991-228	Capacitor, .22 ufd
C2	294991-228	Capacitor, .22 ufd
C3	294991-228	Capacitor, .22 ufd
C4	294991-228	Capacitor, .22 ufd
C5	288755-104	Capacitor, .1 ufd
C6	288755-104	Capacitor, .1 ufd
C7	288755-104	Capacitor, .1 ufd
C8	288755-104	Capacitor, .1 ufd
C9	288755-104	Capacitor, .1 ufd
C10	288755-104	Capacitor, .1 ufd
C11	288755-104	Capacitor, .1 ufd
C12	288755-104	Capacitor, .1 ufd
C13	288755-104	Capacitor, .1 ufd
C14	288755-104	Capacitor, .1 ufd
C15	288755-104	Capacitor, .1 ufd
C16	288755-104	Capacitor, .1 ufd
C17	288755-104	Capacitor, .1 ufd
C18	288755-104	Capacitor, .1 ufd
C19	288755-104	Capacitor, .1 ufd
C20	288755-104	Capacitor, .1 ufd
J1	285306-40	Connector
J2	285306-40	Connector
J3	285306-40	Connector
J4	285306-50	Connector
J5	285306-50	Connector
R1	5-241111-222	Resistor, 2.2 Kohm
R2	5-241111-222	Resistor, 2.2 Kohm
R3	5-241111-222	Resistor, 2.2 Kohm
R4	5-241111-222	Resistor, 2.2 Kohm
R5	5-241111-222	Resistor, 2.2 Kohm
U1	290169-00	I.C., 74LS00
U2	290169-74	I.C., 74LS74
U3	290169-390	I.C., 74LS390
U4	290169-74	I.C., 74LS74
U5	290169-390	I.C., 74LS390
U6	290169-390	I.C., 74LS390
U7	296268-1	I.C., X012B10
U8	290169-74	I.C., 74LS74
U9	290169-390	I.C., 74LS390
U10	287735	I.C., SN74150
U11	290169-367	I.C., 74LS367
U12	290169-367	I.C., 74LS367
U13	290169-367	I.C., 74LS367
U14	290169-367	I.C., 74LS367
U15	290169-367	I.C., 74LS367
U16	290169-367	I.C., 74LS367
U17	290169-367	I.C., 74LS367
U18	290169-367	I.C., 74LS367
U19	290169-138	I.C., 74LS138

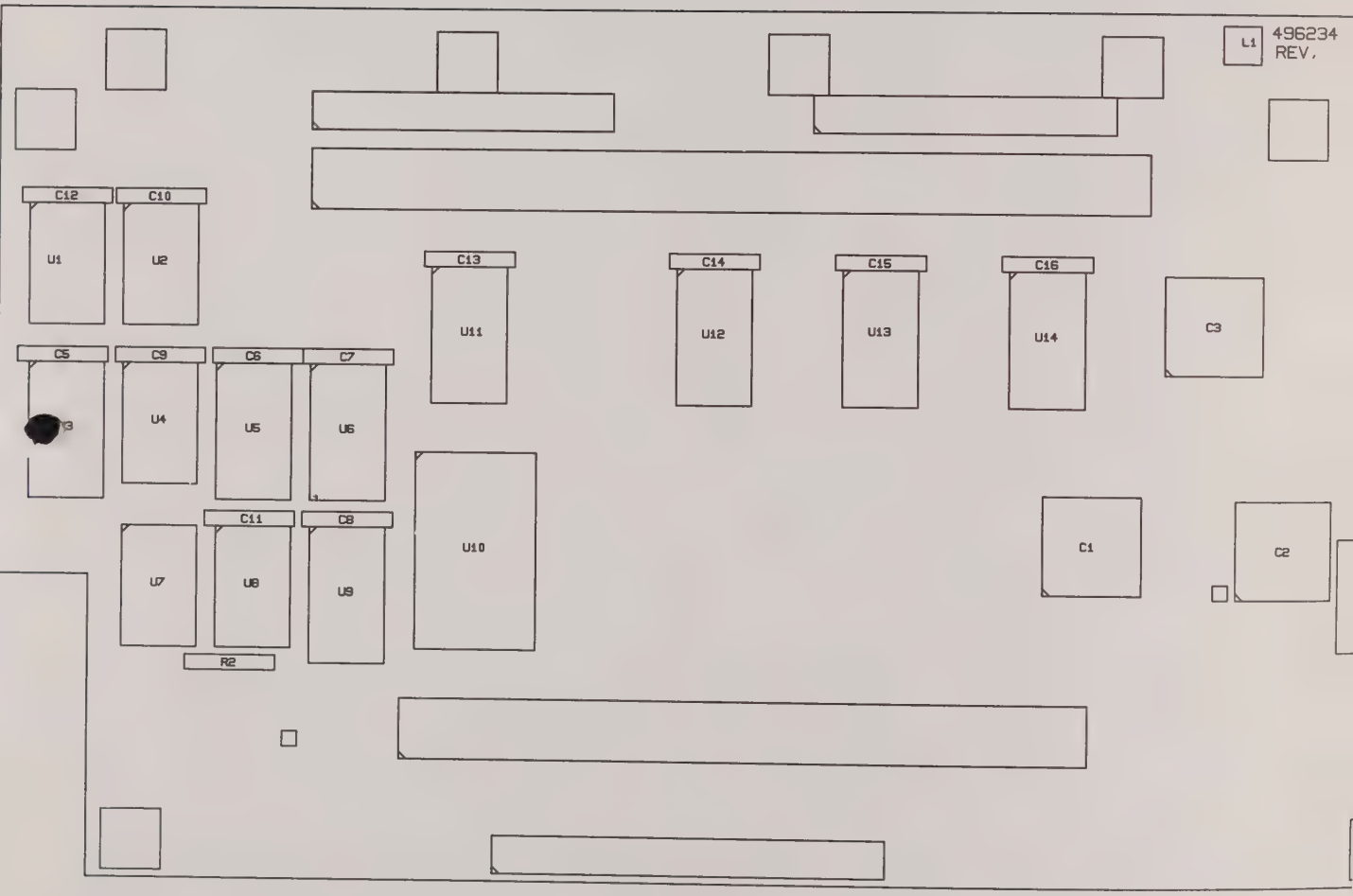

REV. A

FIGURE 6-16 BOARD ASSEM

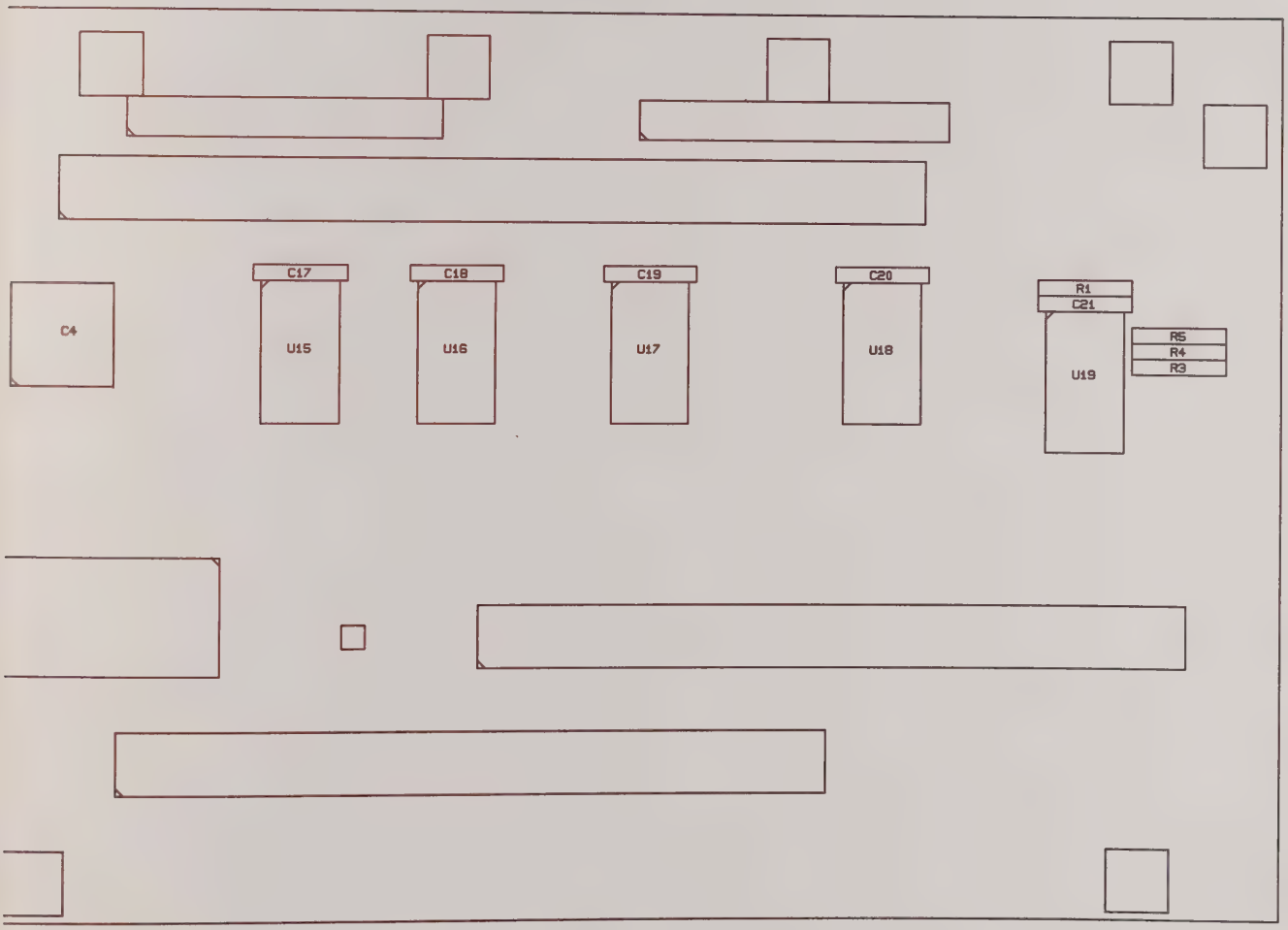
C4
C17
U15
C18
U16
C19
U17
C20
U18
R1
C21
U19
R5
R4
R3

APPENDIX

SCHEMATIC DRAWINGS

This section contains complete schematic drawings for the recorder. The schematics are arranged in numerical order by drawing number. All documents included in this section are listed below, in alpha-numeric order by title, along with their drawing numbers to help locate them. The part number of any PC board assembly may be obtained by replacing the initial "2" in the schematic number with an "8".

ALPHABETICAL LIST OF SCHEMATICS

DESCRIPTION OF ASSEMBLY	SCHEMATIC DRAWING NUMBER & REVISION LEVEL
Analog Board	296235
Digital Board	296236
Front Panel Board	296233
Interconnect Board	296234
Power Supply Board	Schematic

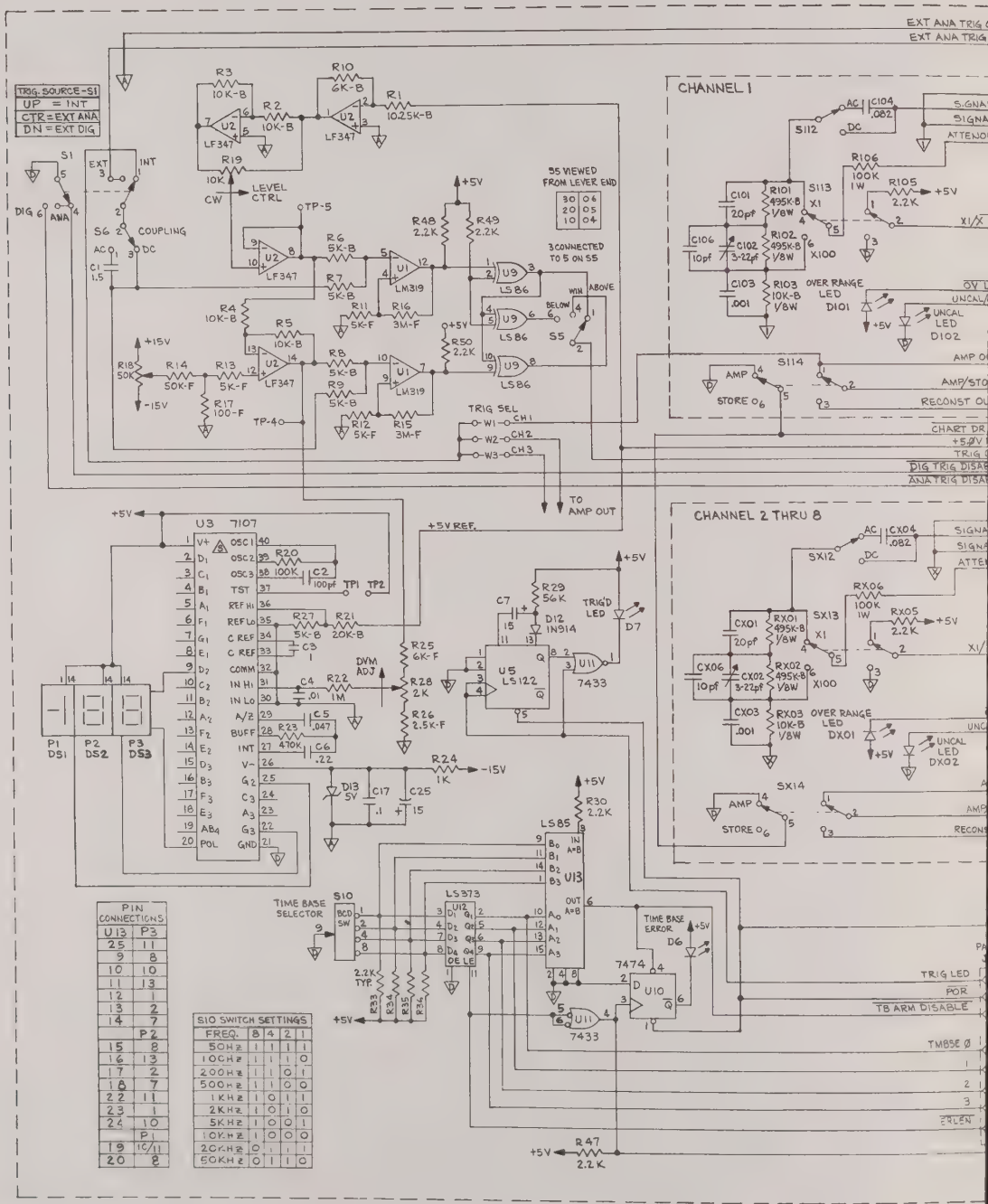

⚠S THIS BOARD CONTAINS STATIC SENSITIVE COMPONENTS AND MUST BE HANDLED PER ME1-0011

2. RESISTOR TOLERANCES:
B= .1%, F= 1%, UNMARKED= 5%, 1/4 WATT.

1. UNLESS OTHERWISE INDICATED:
ALL CAPACITANCE IN MICROFARADS,
ALL RESISTANCE IN OHMS.

NOTES

4. THE DIG GND AND +5V THAT ARE ON J8 AND J9 ARE USED FOR THE OVER RANGE, UNCAL LED, AND S713 ONLY. THEY ARE NOT CONNECTED ON THIS BOARD TO THE DIG GND AND +5V THAT ARE ON J11.

3. "X" IN FIRST DIGIT OF COMPONENT DESIGNATION. WILL INDICATE THE PARTICULAR CHANNEL NO. EXAMPLE: CX01 BECOMES C201 FOR CHANNEL NO. 2.

REVISIONS			
SYM.	DESCRIPTION	DATE	
A-1	NOT AFFECTED PER DCN 30271	2-1-83	COMELLA
B-1	NOT AFFECTED PER DCN 30302	2-19-83	COMELLA
C-1	NOT AFFECTED PER DCN 30422/S. JONES	3-28-83	
D-1	NOT AFFECTED PER DCN 30434/S. JONES	3-28-83	MF

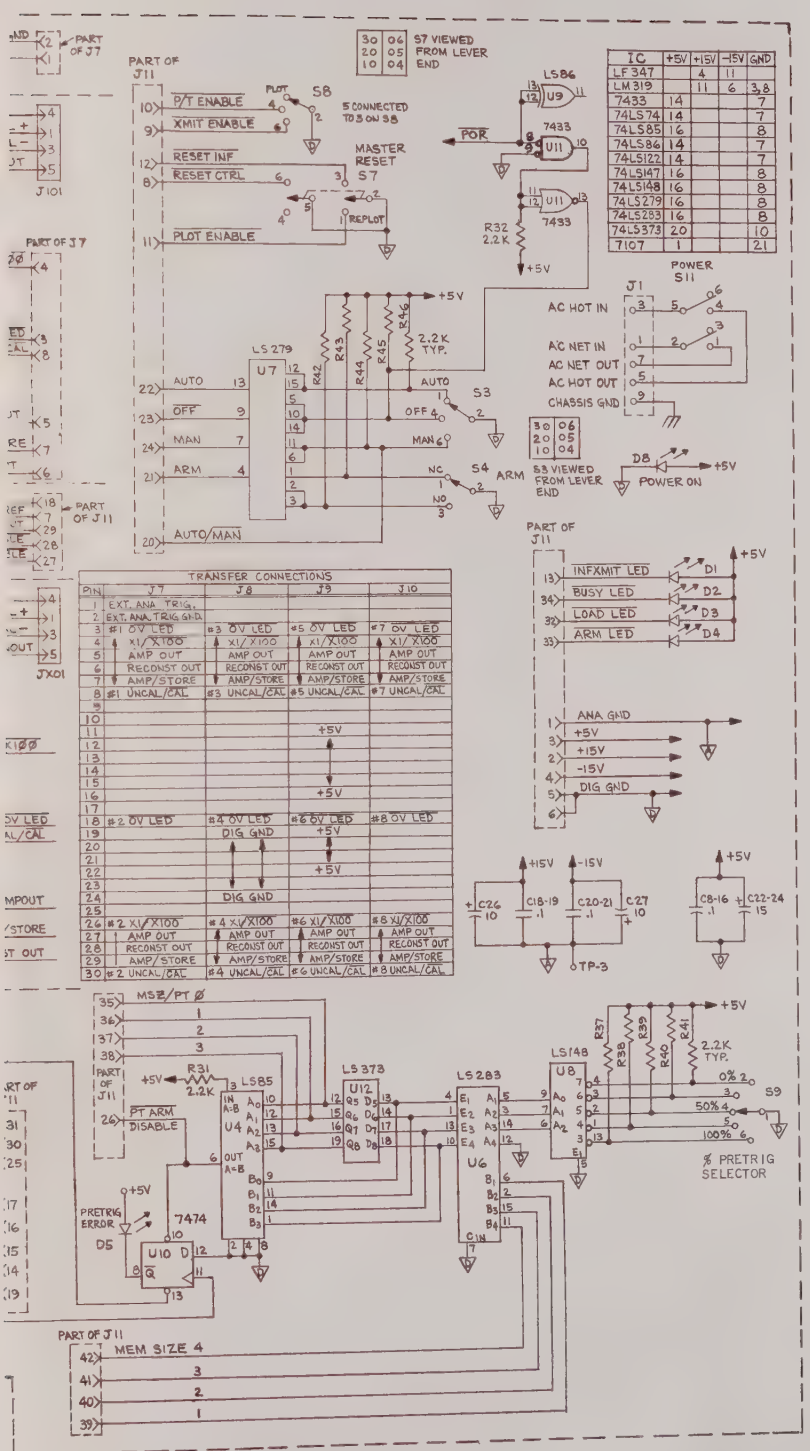

TRANSFER CONNECTIONS				
PIN	J7	J8	J9	J10
1	EXT. ANA TRIG.			
2	EXT. ANA TRIG GND			
3	#1 OV LED	#3 OV LED	#5 OV LED	#7 OV LED
4	X1/X100	X1/X100	X1/X100	X1/X100
5	AMP OUT	AMP OUT	AMP OUT	AMP OUT
6	RECONST OUT	RECONST OUT	RECONST OUT	RECONST OUT
7	AMP/STORE	AMP/STORE	AMP/STORE	AMP/STORE
8	#1 UNCAL/CAL	#3 UNCAL/CAL	#5 UNCAL/CAL	#7 UNCAL/CAL
9				
10				
11			+5V	
12				
13				
14				
15				
16			+5V	
17				
18	#2 OV LED	#4 OV LED	#6 OV LED	#8 OV LED
19		DIG GND	+5V	
20				
21				
22			+5V	
23				
24		DIG GND		
25				
26	#2 X1/X100	#4 X1/X100	#6 X1/X100	#8 X1/X100
27	AMP OUT	AMP OUT	AMP OUT	AMP OUT
28	RECONST OUT	RECONST OUT	RECONST OUT	RECONST OUT
29	AMP/STORE	AMP/STORE	AMP/STORE	AMP/STORE
30	#2 UNCAL/CAL	#4 UNCAL/CAL	#6 UNCAL/CAL	#8 UNCAL/CAL

BOARD ASS'Y., FRONT PART NO. 896233

BY	DATE	NAME
DR SWARTZ	1/10/83	SCHEMATIC
CH	2/02/83	
APP	2/23/83	

CODE IDENT. 96795 | ISSUE CODE G

Gould Inc.
Instruments Division
Cleveland, Ohio 44114 U.S.A.

DWG. NO. 296233

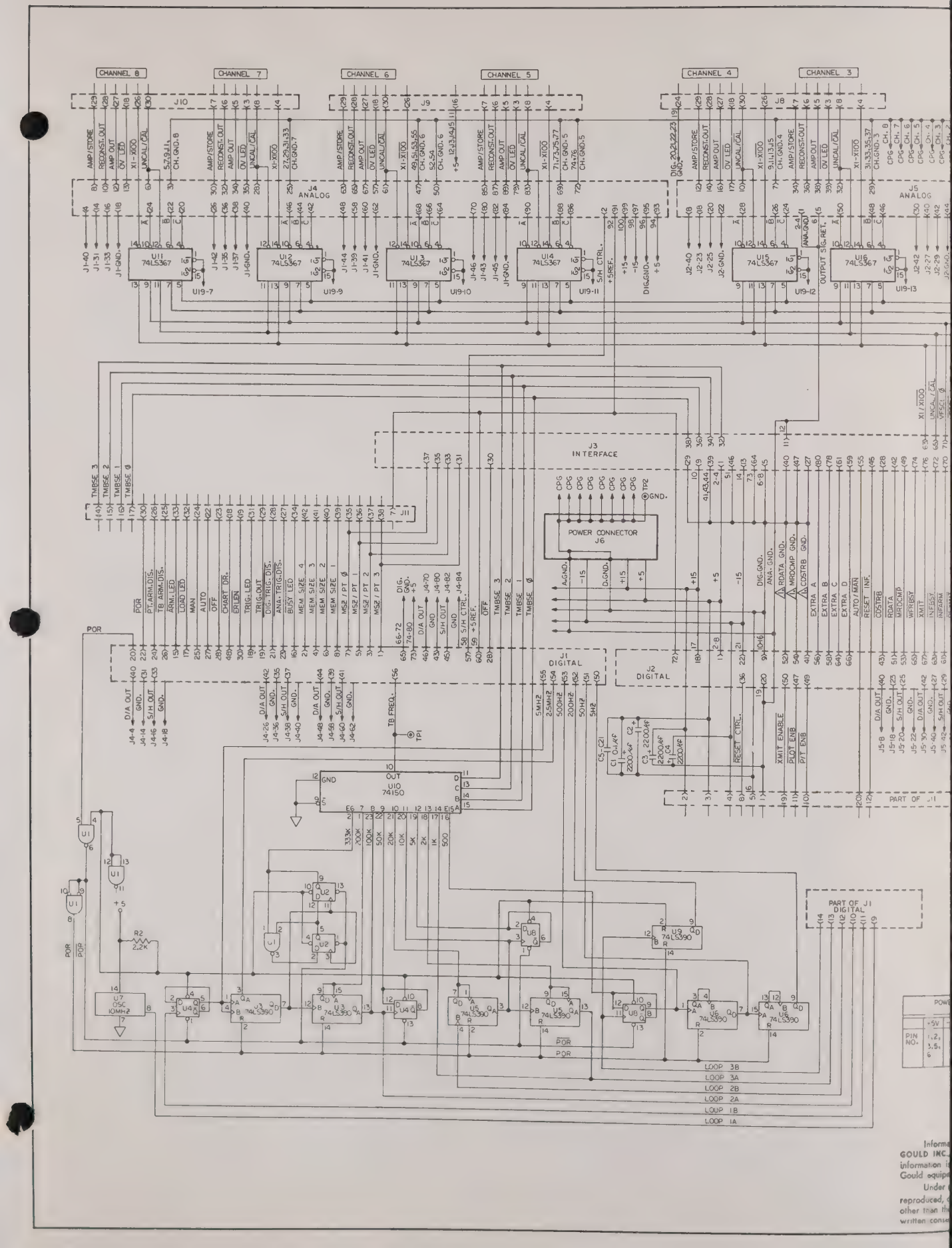
CHANNEL 8
CHANNEL 7
CHANNEL 6
CHANNEL 5
CHANNEL 4
CHANNEL 3
J10
J9
J8
J4 ANALOG
J5 ANALOG
U11 74LS367
U12 74LS367
U13 74LS367
U14 74LS367
U15 74LS367
U16 74LS367
J3 INTERFACE
POWER CONNECTOR J6
J1 DIGITAL
J2 DIGITAL
J11
U10 74150
U1 74LS390
U2 74LS390
U3 74LS390
U4 74LS390
U5 74LS390
U6 74LS390
U7 OSC 10MHz
U8 74LS390
U9 74LS390
POR
PART OF J1 DIGITAL
LOOP 3B
LOOP 3A
LOOP 2B
LOOP 2A
LOOP 1B
LOOP 1A

REVISIONS			
SYM.	DESCRIPTION	DATE	APPROVAL
A-1	NOT AFFECTED PER DCN 30150 J.COMELLA	1/19/83	
B-1	NOT AFFECTED PER DCN 30299	2/12/83	
C-1	NOT AFFECTED PER DCN 30370 J.COMELLA	3/1/83	MF
D-1	NOT AFFECTED PER DCN 30422 /S.JONES	5-28-83	

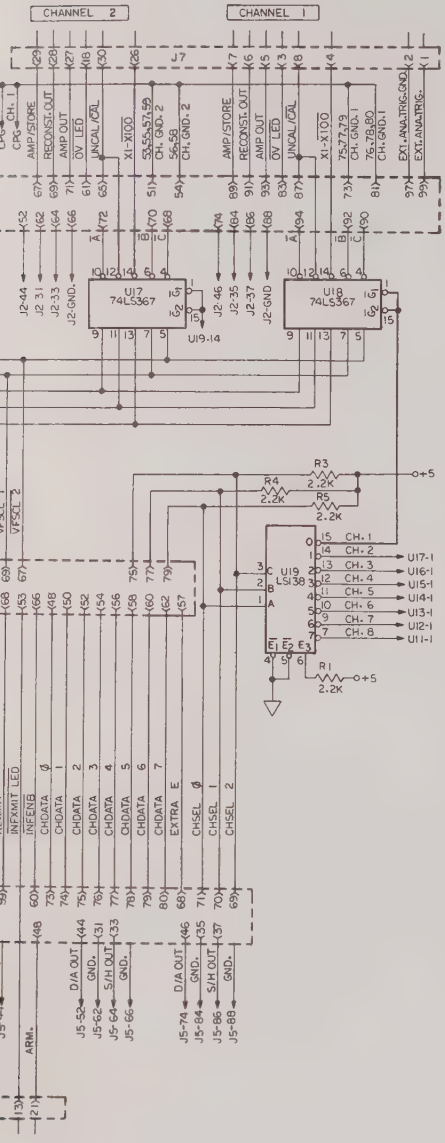

6. J7 THRU J11 ARE TRANSFER CONNECTORS MOUNTED BETWEEN INTER-CONNECT BOARD AND FRONT PANEL BOARD.

5. UNLESS OTHERWISE INDICATED: ALL CAPACITANCE IN MICROFARADS, ALL RESISTANCE IN OHMS.

4. ALL RESISTORS 5%, 1/4 WATT UNLESS OTHERWISE INDICATED.

3. S/H OUT HAS A GND. LINE RUNNING ALONG BOTH SIDES OF IT.

2. CH.1 AND CH.2 S/H OUT LINES AND ASSOCIATED GNDS. PASS THRU J3 CONNECTOR PINS 15 TO 26.

1. THESE LINES RUN ON ONE SIDE OF THERE ASSOCIATED SIGNAL LINE.

NOTES:

R CONNECTOR J6

15V	+15V	GND.
9	12	4,7,8,10, 11

DEVICE	VCC PIN NO.	GND. PIN NO.	SYMBOL
74LS00	14	7	U1
74LS74	14	7	U2,U4,U8
74LS138	16	8	U19
74LS390	16	8	U3,U5,U6,U9
74LS367	16	8	U11-U18
74150	24	12	U10
OSC	14	7	U7

tion contained herein is considered proprietary to INSTRUMENT SYSTEMS DIVISION. Release of this to facilitate the servicing and maintenance of nent only.
no circumstances shall this information be transmitted, disclosed to, or used by any person or organization ose engaged in such activities without the express nt of GOULD INC., INSTRUMENT SYSTEMS DIVISION.

BOARD ASSY., INTER-CONNECT 896234

BY	DATE	NAME	Gould Inc. Instruments Division Cleveland, Ohio 44114 U.S.A
DR. J.DAVIS	1-19-83	SCHEMATIC	DWG. NO. 296234
CH. G. Kashner	1-21-83	CODE IDENT. 96795 ISSUE CODE G	
APP. G. Kroggel	1-21-83		

REVISIONS			
SYM.	DESCRIPTION	DATE	APPROVAL
A-1	NOT AFFECTED PER DCN 30248/A, SOTEROS	2-1-83	

B. 30372
C. 30450 / 30451
D. 30484

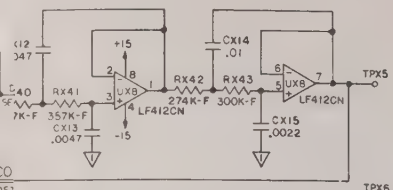

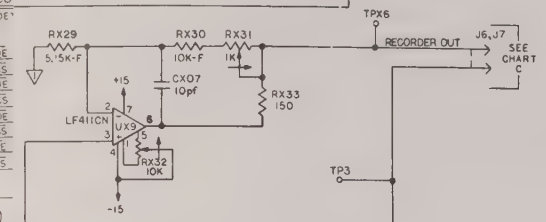

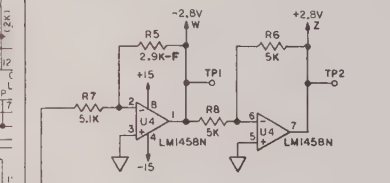

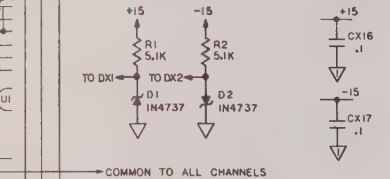

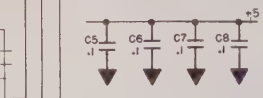

CHART C

CHANNEL	HIGH	COMMON
1	J7-1	
2	J7-2	J7-5,6,7,8,9
3	J7-3	
4	J7-4	
5	J6-2	
6	J6-3	J6-1,6,7,8,9
7	J6-4	
8	J6-5	

CHART B

	P5 BOTTOM OF ANALOG BD EVEN		P5 TOP OF ANALOG BD ODD		P4 BOTTOM OF ANALOG BD EVEN		P4 TOP OF ANALOG BD ODD	
	2	ANALOG GND	1	ANALOG GND	2	S/H CTRL	1	—
	4	ANALOG GND	3	ANALOG GND	4	D/A OUT	3	CH. GND. 8
	6	OUTPUT SIG. RET.	5	OUTPUT SIG. RET.	6	UNCAL/CAL	5	↕
	8	D/A OUT	7	CH. GND. 4	8	AMP/STORE	7	↕
	10	UNCAL/CAL	9	↕	10	RECONST OUT	9	↕
	12	AMP/STORE	11	↕	12	AMP OUT	11	CH. GND. 8
	14	RECONST OUT	13	↕	14	GND	13	OV LED
CHANNEL 4	16	AMP OUT	15	CH. GND. 4	16	S/H OUT	15	—
	18	GND	17	OV LED	18	GND	17	—
	20	S/H OUT	19	—	20	ENCODER C	19	—
	22	GND	21	—	22	ENCODER B	21	—
	24	ENCODER C	23	—	24	ENCODER A	23	—
	26	ENCODER B	25	—	26	D/A OUT	25	CH. GND. 7
	28	ENCODER A	27	—	28	UNCAL/CAL	27	↕
	30	D/A OUT	29	CH. GND. 3	30	AMP/STORE	29	↕
	32	UNCAL/CAL	31	↕	32	RECONST OUT	31	↕
	34	AMP/STORE	33	↕	34	AMP OUT	33	CH. GND. 7
CHANNEL 3	36	RECONST OUT	35	↕	36	GND	35	OV LED
	38	AMP OUT	37	CH. GND. 3	38	S/H OUT	37	—
	40	GND	39	OV LED	40	GND	39	—
	42	S/H OUT	41	—	42	ENCODER C	41	—
	44	GND	43	—	44	ENCODER B	43	—
	46	ENCODER C	45	—	46	ENCODER A	45	—
	48	ENCODER B	47	—	48	D/A OUT	47	CH. GND. 6
	50	ENCODER A	49	—	50	CH. GND. 6	49	↕
	52	D/A OUT	51	CH. GND. 2	52	CH. GND. 6	51	↕
	54	CH. GND. 2	53	↕	54	CH. GND. 6	53	↕
	56	CH. GND. 2	55	↕	56	—	55	CH. GND. 6
	58	CH. GND. 2	57	↕	58	GND	57	OV LED
CHANNEL 2	60	—	59	CH. GND. 2	60	S/H OUT	59	—
	62	GND	61	OV LED	62	GND	61	UNCAL/CAL
	64	S/H OUT	63	—	64	ENCODER C	63	AMP/STORE
	66	GND	65	UNCAL/CAL	66	ENCODER B	65	RECONST OUT
	68	ENCODER C	67	AMP/STORE	68	ENCODER A	67	AMP OUT
	70	ENCODER B	69	RECONST OUT	70	D/A OUT	69	CH. GND. 5
	72	ENCODER A	71	AMP OUT	72	CH. GND. 5	71	↕
	74	D/A OUT	73	CH. GND. 1	74	CH. GND. 5	73	↕
	76	CH. GND. 1	75	↕	76	CH. GND. 5	75	↕
	78	CH. GND. 1	77	↕	78	—	77	CH. GND. 5
	80	CH. GND. 1	79	↕	80	GND	79	OV LED
CHANNEL 1	82	—	81	CH. GND. 1	82	S/H OUT	81	—
	84	GND	83	OV LED	84	GND	83	UNCAL/CAL
	86	S/H OUT	85	—	86	ENCODER C	85	AMP/STORE
	88	GND	87	UNCAL/CAL	88	ENCODER B	87	RECONST OUT
	90	ENCODER C	89	AMP/STORE	90	ENCODER A	89	AMP OUT
	92	ENCODER B	91	RECONST OUT	92	+5 REF.	91	+5 REF.
	94	ENCODER A	93	AMP OUT	94	+5V	93	+5V
	96	—	95	—	96	DIG GND	95	DIG GND
	98	—	97	EXT. ANA. TRIG GND	98	-15V	97	-15V
	100	—	99	EXT. ANA. TRIG	100	+15V	99	+15V

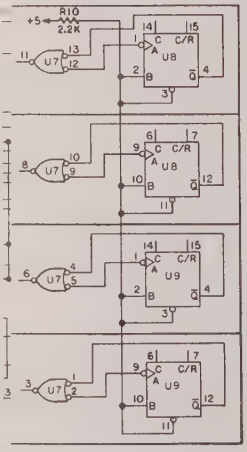

ntained herein is considered proprietary to
UMENT SYSTEMS DIVISION. Release of this
ilitate the servicing and maintenance of
ly.
mstances shall this information be transmitted,
d to, or used by any person or organization
aged in such activities without the express
OULD INC., INSTRUMENT SYSTEMS DIVISION.

BOARD ASS'Y., ANALOG 896235 MODEL NO. 13-4186-00

	BY	DATE
DR	A. SOTEROS	2-1-83
CH	D. Karhan	2-11-83
APP	J. Sakellakis	2-11-83

NAME: SCHEMATIC

CODE IDENT. 96795 | ISSUE CODE G

Gould Inc.
Instruments Division
Cleveland, Ohio 44114 U.S.A.

DWG. NO. 296235

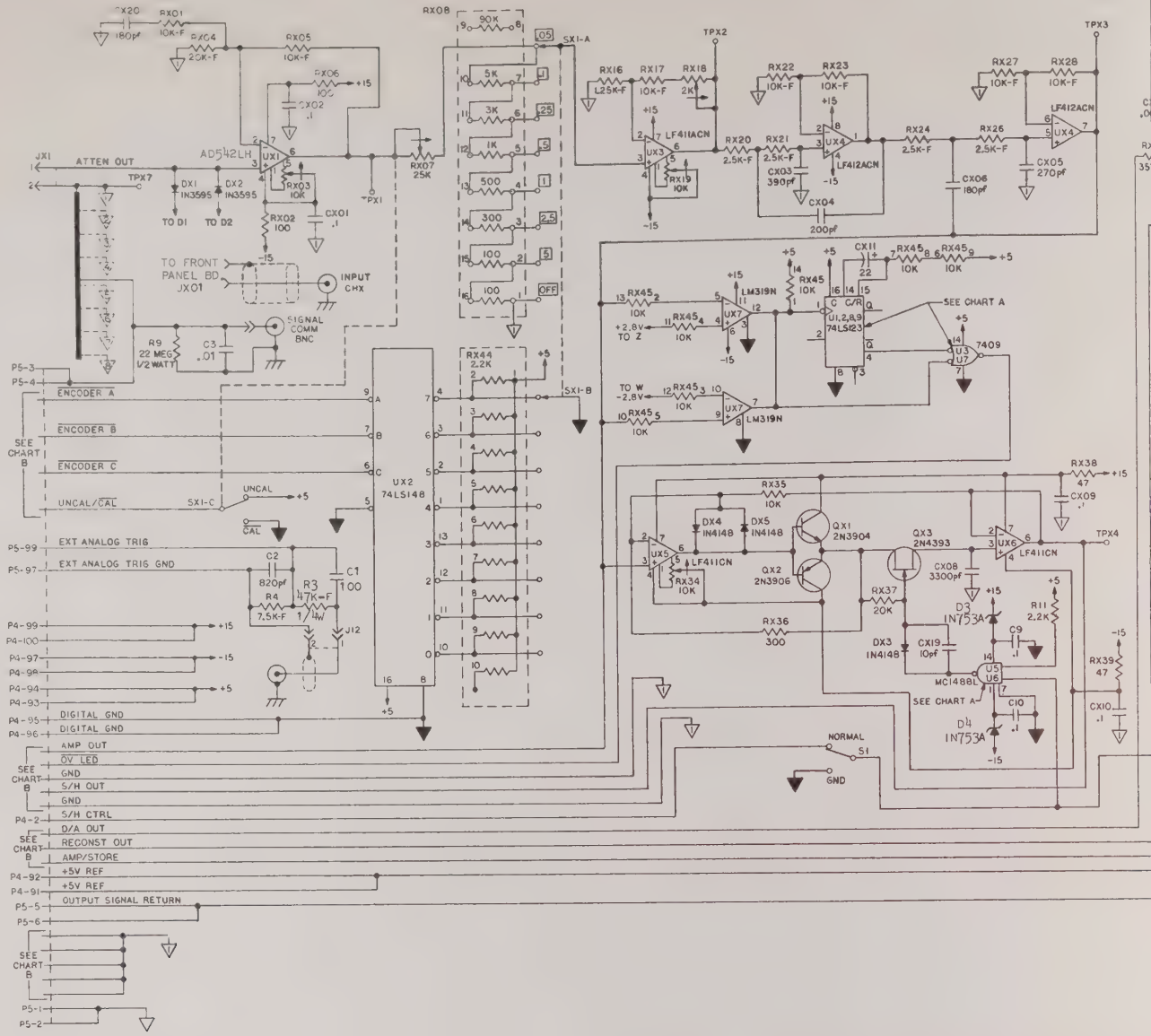

CHART A

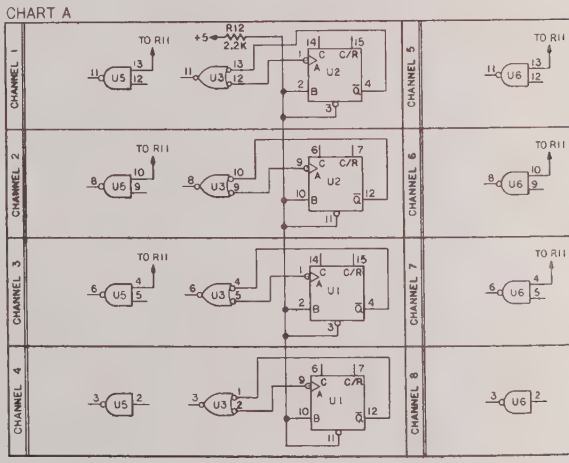

6. RX07 AND SX1-C ARE ACTUATED BY INNER SHAFT OF SWITCH SX-1.
5. RATIO MATCH OF RX08 IS ±.05%.
4. "X" DESIGNATION REPRESENTS THE PARTICULAR CHANNEL (1 THRU 8) DIVISION.
3. GND DESIGNATIONS:
   ▽ = ANALOG
   ▼ = DIGITAL
   ▽ = CHANNEL
2. RESISTOR TOLERANCE F = 1.0% 1/8 WATT
1. UNLESS OTHERWISE INDICATED, ALL CAPACITANCE IN MICROFARADS. ALL RESISTANCE IN OHMS. ALL RESISTORS ±5%, 1/4 WATT.

NOTES:

Information co
GOULD INC., INSTR
information is to fa
Gould equipment or
Under no circu
reproduced, disclose
other than those en
written consent of G

REVISIONS			
SYM.	DESCRIPTION	DATE	APPROVAL
A-1	ORIG. RELEASED PER DCN 30242	1-21-83	J. DAVIS
B-1	NOT AFFECTED PER DCN 30308	2-10-83	J DAVIS

C, 30343
30344

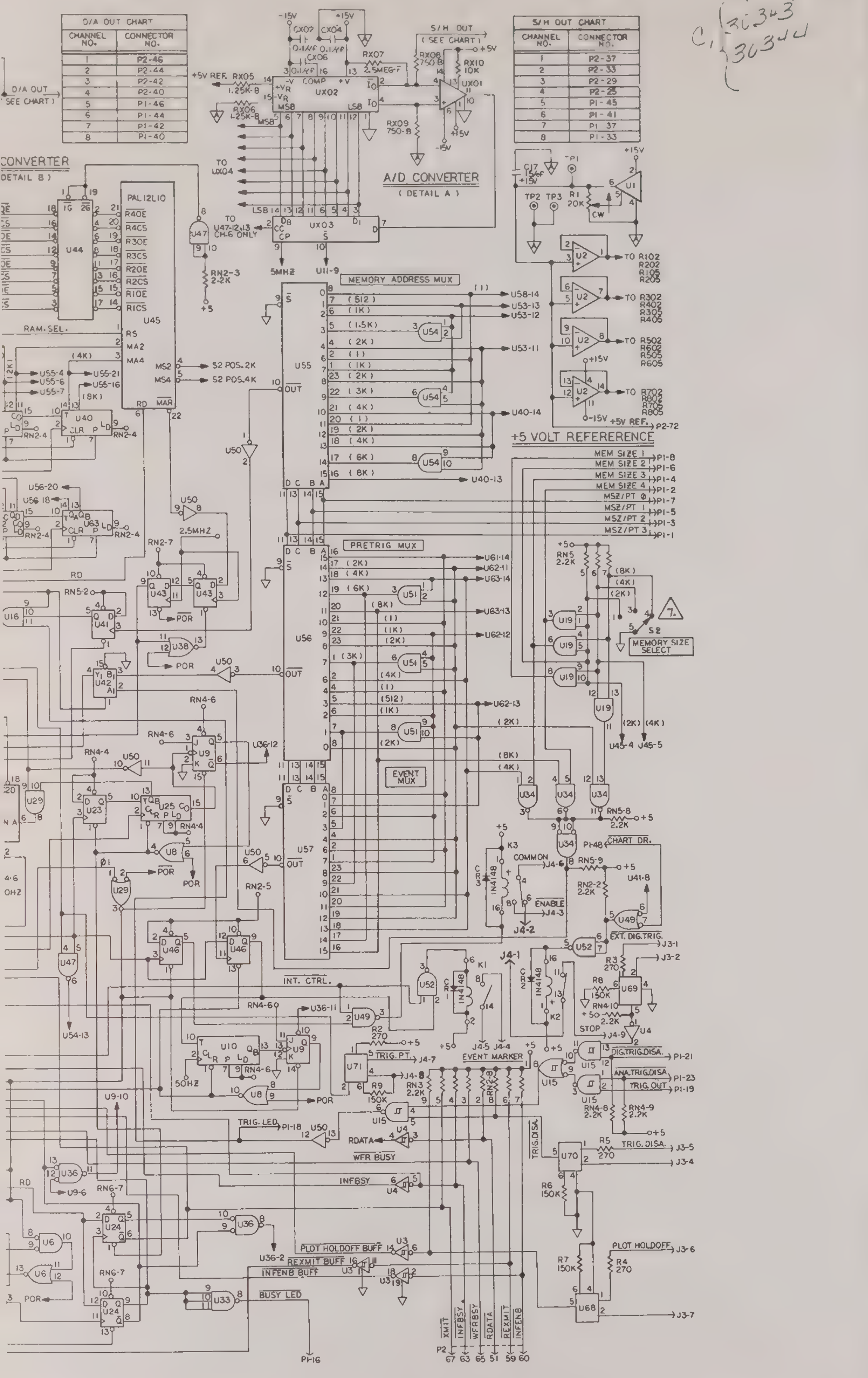

D/A OUT CHART	
CHANNEL NO.	CONNECTOR NO.
1	P2-46
2	P2-44
3	P2-42
4	P2-40
5	P1-46
6	P1-44
7	P1-42
8	P1-40

S/H OUT CHART	
CHANNEL NO.	CONNECTOR NO.
1	P2-37
2	P2-33
3	P2-29
4	P2-25
5	P1-45
6	P1-41
7	P1 37
8	P1-33

ion contained herein is considered proprietary to INSTRUMENT SYSTEMS DIVISION. Release of this to facilitate the servicing and maintenance of ent only.
o circumstances shall this information be transmitted, sclosed to, or used by any person or organization se engaged in such activities without the express l of GOULD INC., INSTRUMENT SYSTEMS DIVISION.

BOARD ASSEMBLY, DIGITAL 896236

BY		DATE
DR	J. DAVIS	1/13/83
CH	G. Kastner	2/4/83
APP	G. Kroggel	2/4/83

NAME: SCHEMATIC

CODE IDENT. 96795 | ISSUE G | CODE

Gould Inc.
Instruments Division
Cleveland, Ohio 44114 U.S.A.

DWG. NO. 296236

SH. 1 OF 2

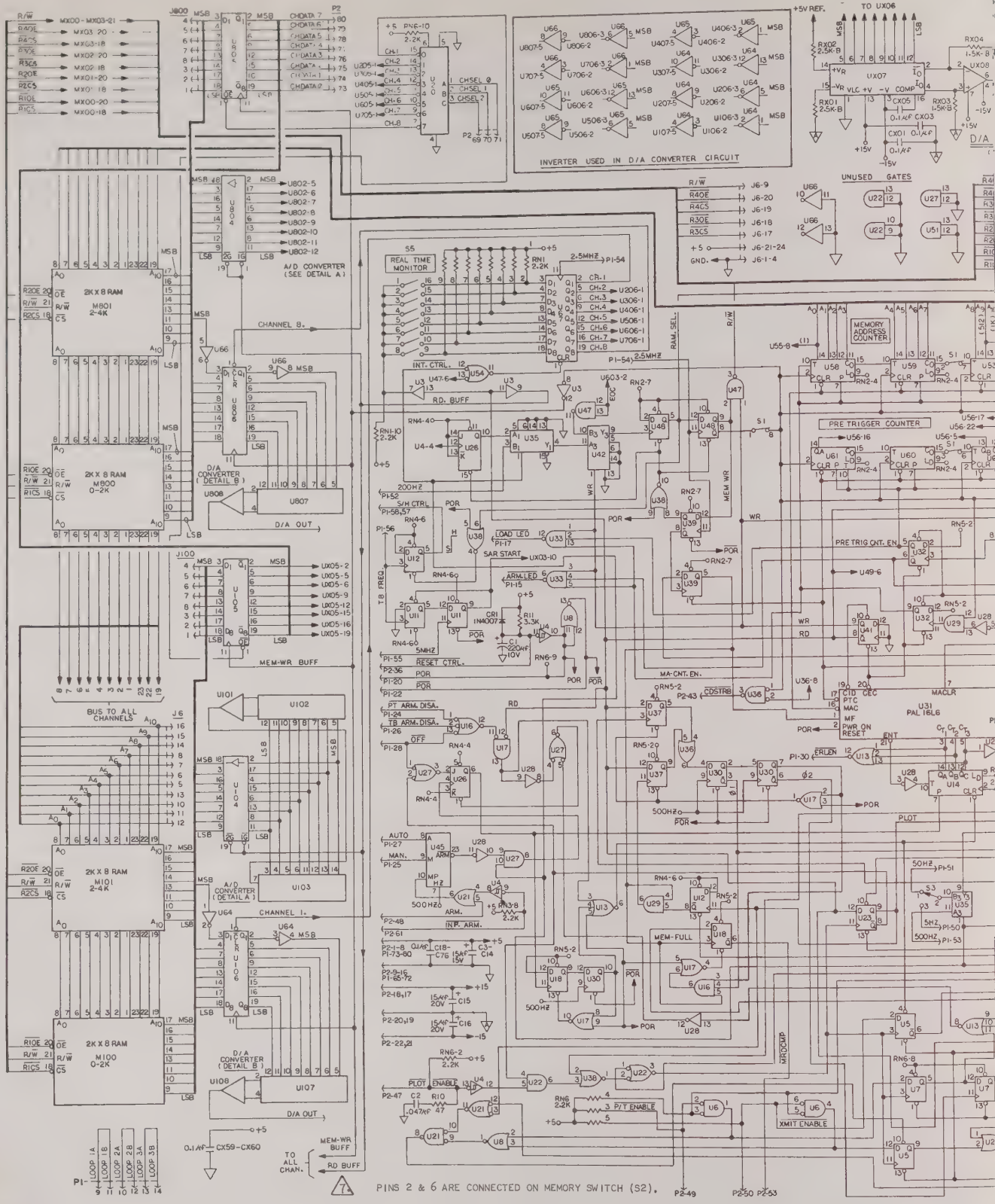

NOTES:

1. UNLESS OTHERWISE INDICATED; ALL CAPACITANCE IN MICROFARADS, ALL RESISTANCE IN OHMS.
2. RESISTOR TOLERANCES: B = .1% F = 1% UNMARK = 5%, 1/4 WATT.
3. ⏚ = ANALOG GROUND. ⏚ = DIGITAL GROUND.
4. ALL RESISTOR NETWORKS: 2%, 2.2K. ALL RESISTOR NETWORKS: PIN 1 = +5VOLTS.
5. CHANNELS 2 THRU 8 IDENTICAL TO CHANNEL 1.
6. J6, JX00 ARE USED FOR ADD ON MEMORY OPTION.
7. PINS 2 & 6 ARE CONNECTED ON MEMORY SWITCH (S2).

Inform
GOULD INC
information
Gould equip
Under
reproduced,
other than t
written cons

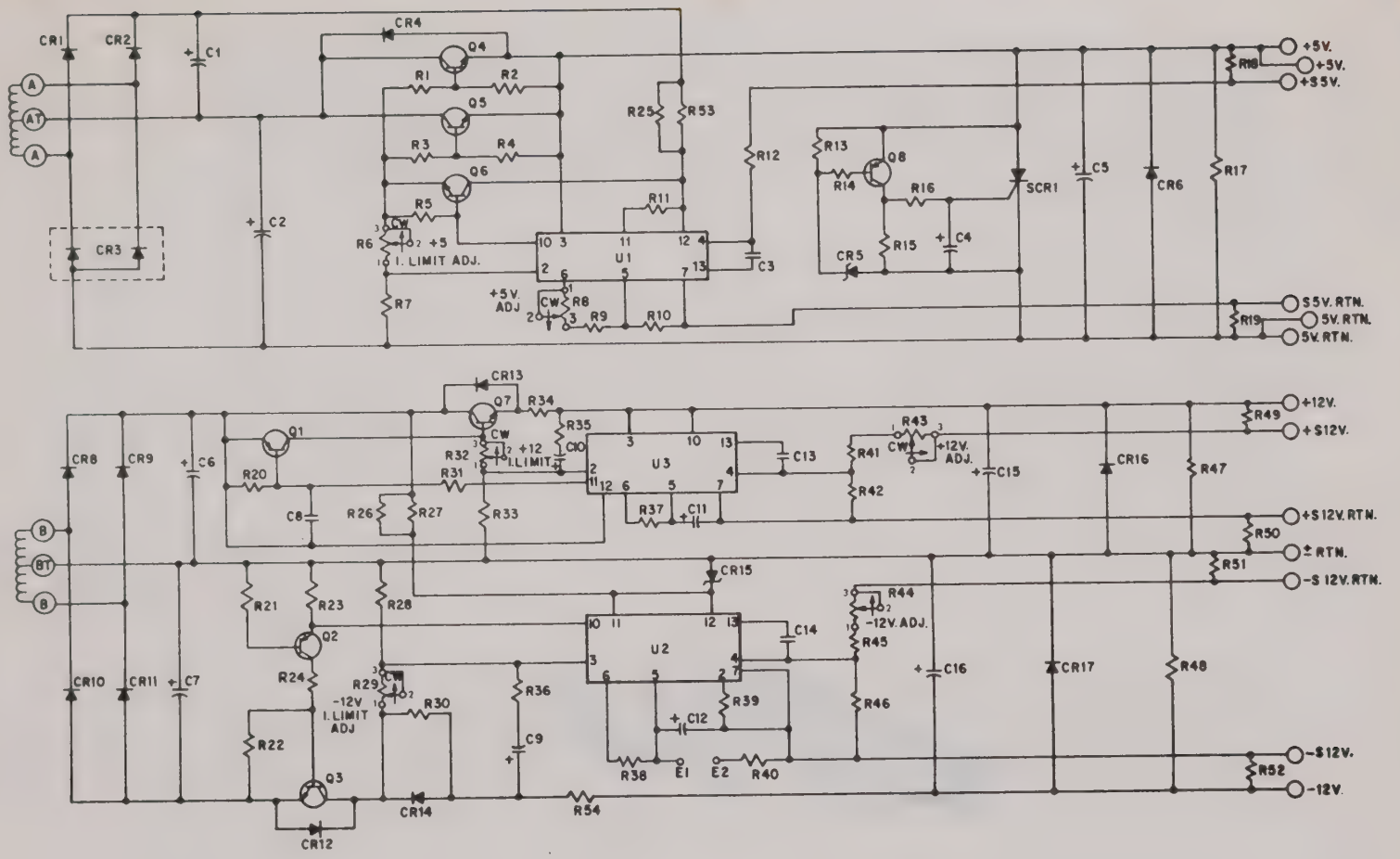

POWER SUPPLY SCHEMATIC

P1

2	MEM SIZE 4	1	MSZ/PT 3
4	MEM SIZE 3	3	MSZ/PT 2
6	MEM SIZE 2	5	MSZ/PT 1
8	MEM SIZE 1	7	MSZ/PT 0
10	LOOP 2A	9	LOOP 1A
12	LOOP 2B	11	LOOP 1B
14	LOOP 3B	13	LOOP 3A
16	BUSY LED	15	ARM LED
18	TRIG LED	17	LOAD LED
20	POR	19	TRIG OUT
22	POR	21	DIG TRIG DIS
24	PT ARM DIS	23	ANA TRIG DIS
26	TB ARM DIS	25	MAN
28	OFF	27	AUTO
30	ERLEN	29	
32		31	#8 GND
34		33	#8 S/H OUT
36		35	#7 GND
38		37	#7 S/H OUT
40	#8 D/A OUT	39	#6 GND
42	#7 D/A OUT	41	#6 S/H OUT
44	#6 D/A OUT	43	#5 GND
46	#5 D/A OUT	45	#5 S/H OUT
48	CHART DR	47	
50	5HZ	49	
52	200 HZ	51	50HZ
54	2.5 MHZ	53	500HZ
56	TB FREQ	55	5MHZ
58	S/H CTRL	57	S/H CTRL
60	+5V REF	59	+5V REF
62		61	
64		63	
66	DIG GND	65	DIG GND
68	DIG GND	67	DIG GND
70	DIG GND	69	DIG GND
72	DIG GND	71	DIG GND
74	+5V	73	+5V
76	+5V	75	+5V
78	+5V	77	+5V
80	+5V	79	+5V

P2

2	+5V	1	+5V
4	+5V	3	+5V
6	+5V	5	+5V
8	+5V	7	+5V
10	DIG GND	9	DIG GND
12	DIG GND	11	DIG GND
14	DIG GND	13	DIG GND
16	DIG GND	15	DIG GND
18	+15V	17	+15V
20	ANA GND	19	ANA GND
22	-15V	21	-15V
24		23	#4 GND
26		25	#4 S/H OUT
28		27	#3 GND
30		29	#3 S/H OUT
32		31	#2 GND
34		33	#2 S/H OUT
36	RESET CTRL	35	#1 GND
38		37	#1 S/H OUT
40	#4 D/A OUT	39	
42	#3 D/A OUT	41	CDSTRB GND
44	#2 D/A OUT	43	CDSTRB
46	#1 D/A OUT	45	
48	ARM	47	PLOT ENABLE
50	XMIT ENABLE	49	P/T ENABLE
52	RDATA GND	51	RDATA
54	MRDCMP GND	53	MRDCMP
56	EXTRA A	55	
58	EXTRA B	57	
60	INFENB	59	REXMIT
62		61	INFARM
64	EXTRA C	63	INFBSY
66	EXTRA D	65	WFRBSY
68	EXTRA E	67	XMIT
70	CHSEL 1	69	CHSEL 2
72	+5V REF	71	CHSEL 0
74	CHDATA 1	73	CHDATA 0
76	CHDATA 3	75	CHDATA 2
78	CHDATA 5	77	CHDATA 4
80	CHDATA 7	79	CHDATA 6

REVISIONS			
SYM.	DESCRIPTION	DATE	APPROVAL

DIGITAL BD

IC	+5V	GND	+15V	-15V	SYMBOL
74LS00	14	7			U47
74LS02	14	7			U6, U8, U17, U38
74LS03	14	7			U34
74LS04	14	7			U28, U50, U64-U66
74LS08	14	7			U19, U22, U27, U29, U51, U54
74LS11	14	7			U16
74LS12	14	7			U33
74LS14	14	7			U4
74LS27	14	7			U13
74LS32	14	7			U21, U36
74LS74	14	7			U5, U7, U11, U18, U23, U24, U37
"					U39, U48, U41, U43, U46
7474	14	7			U12, U32
74LS112	16	8			U9
74LS132	14	7			U15
74LS138	16	8			U20
74150	24	12			U55, U56, U57
74LS157	16	8			U35.U42
74LS161	16	8			U10, U14, U25, U40, U53, U58-U63
74LS244	20	10			UX04, U3, U44
74LS273	20	10			UX06, U67
74LS109	16	8			U26
74LS175	16	8			U30
74LS534	20	10			UX05
75472	8	4			U49, U52
PAL12L10	24	12			U45
PAL16L6	24	12			U31
TMS4016-20	24	12			MX00, MX01
DAC-08			13	3	UX02, UX07
AM2502	16	8			UX03
LM361	14	10	1	6	UX01
LF351N			7	4	UX08
OP-11EY			4	11	U2
REF-02		4	2		U1
4N25	-	-	-	-	U68-U71

BOARD ASSEMBLY, DIGITAL 896236

BY	DATE	NAME	Gould Inc. Instruments Division Cleveland, Ohio 44114 U.S.A.
DR. J. DAVIS	1/13/83	SCHEMATIC	
CH. D. Kastner	3/4/83	CODE IDENT. 96795 / ISSUE CODE G	DWG. NO. 296236
APP. Knoggel	3/4/83		SH. 2 OF 2

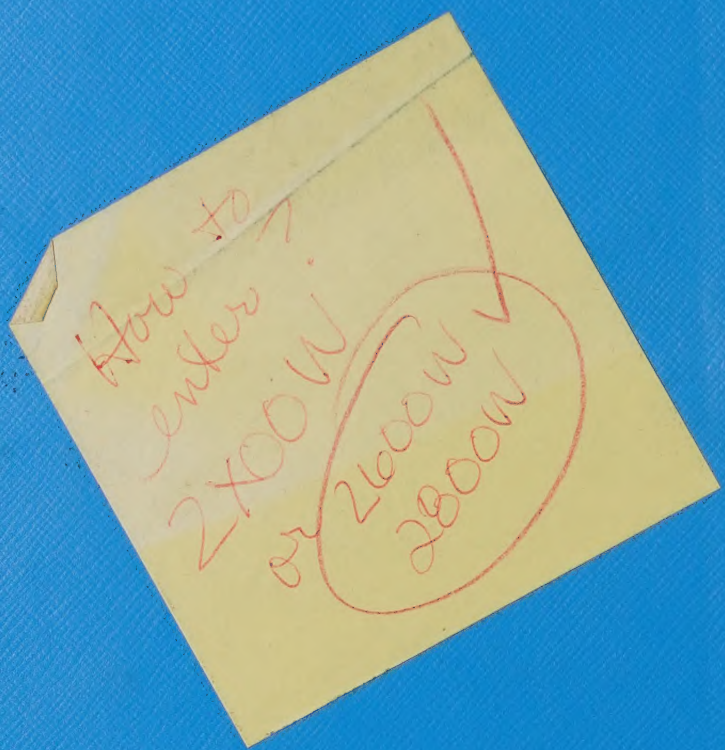

MP MASTER
MA34606

Gould Inc., Recording Systems Division
3631 Perkins Avenue Cleveland, Ohio 44114
Telephone (216) 361-3315

GOULD
Electronics